STEP 3

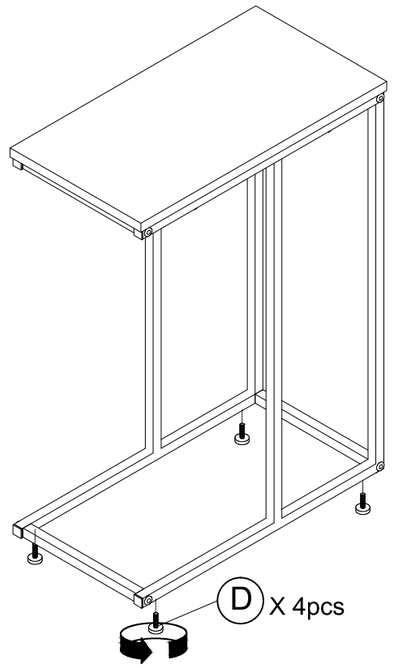

Recommended Maximum Weight

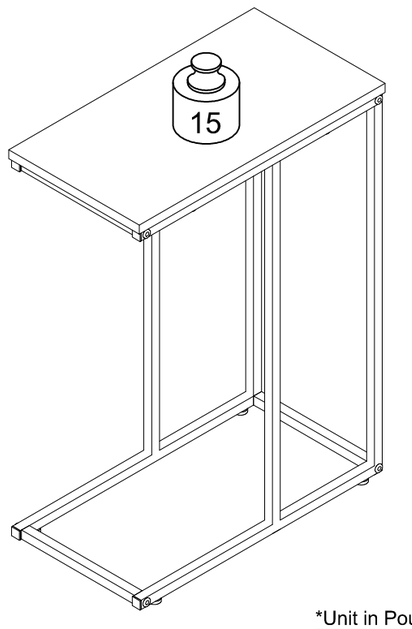

*Unit in Pound(lbs.)

WARNING:

>This unit has been designed to support the maximum loads shown. Exceeding these load limits could cause sagging, instability, product collapse, and/or serious injury.

>DO NOT allow children to climb on unit.

> Put heavier items on lower shelves.

Furinno®
Fits Space. Fits Budget

00:10
Approx. 10 minutes

Recomm. 1 Person

No Tools Required

Assembly Instruction

Furinno Modern Side Table

MODEL : **FM19123**

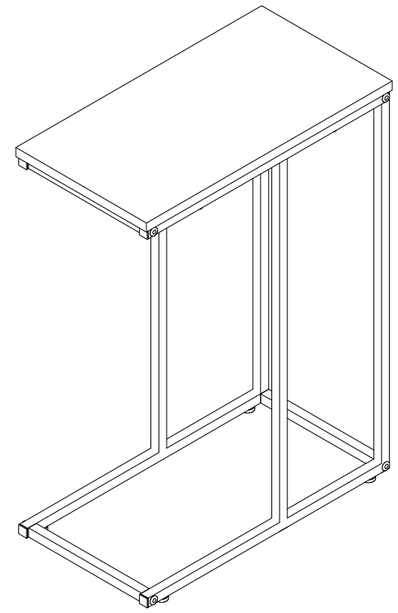

Customer Support

NEED HELP? For replacement requests or product inquiries, please contact our Customer Service Team by emailing us at **support@furinno.com**. Thank you for selecting Furinno!

www.furinno.com

HARDWARE & PARTS LIST

NO	HARDWARE LIST	QTY
A	LONG SCREW	8pcs
B	SHORT SCREW	4pcs
C	ALLEN KEY	1pc
D	SCREW LEG	4pcs

NO	PARTS LIST	QTY
1	METAL FRAME	2pcs
2	RAIL	4pcs
3	TOP PANEL	1pc

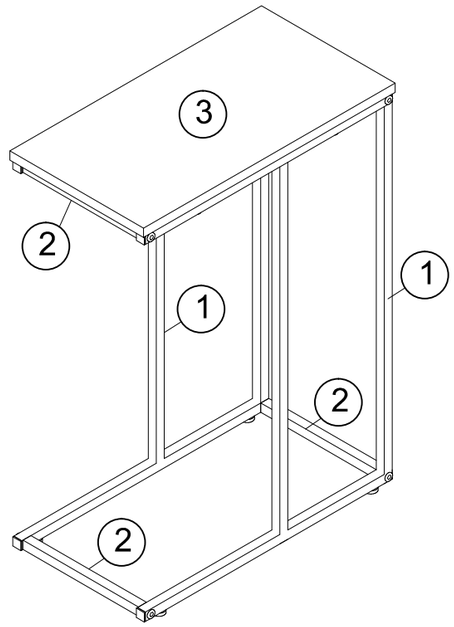

USEFUL HINTS BEFORE YOU START:

1. Read each step carefully before assembling.
2. It is important that each step is performed in correct order to avoid difficulties.
3. Identify, sort and count the parts before assembly.
4. Assemble your furniture on packaging cardboard to prevent scratch or damage.
5. Clean the product with mild cleanser using soft damped cloth. Do not use harsh or abrasive cleanser.
6. Using uncompatible hardware might cause damage to product.

ASSEMBLY INSTRUCTIONS

BEFORE YOU BEGIN, PLEASE READ ASSEMBLY INSTRUCTION CAREFULY, FOLLOW THEM STEP BY STEP.

STEP 1

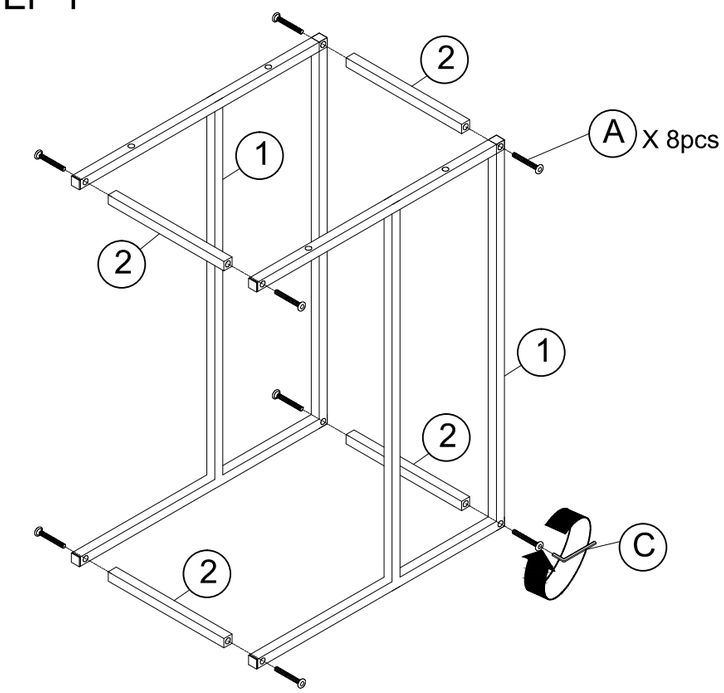

STEP 2

