

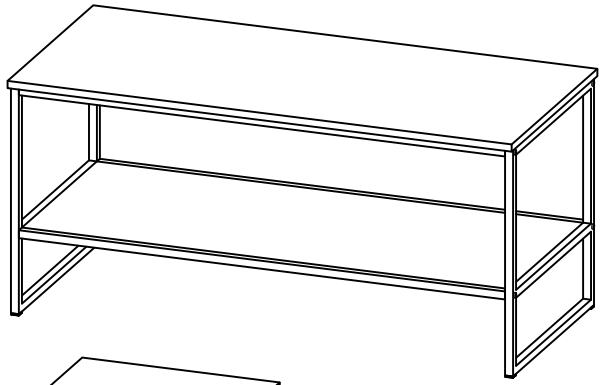

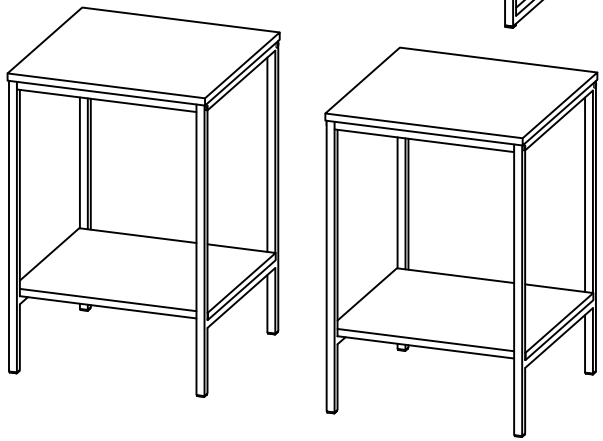

MODEL: 25648

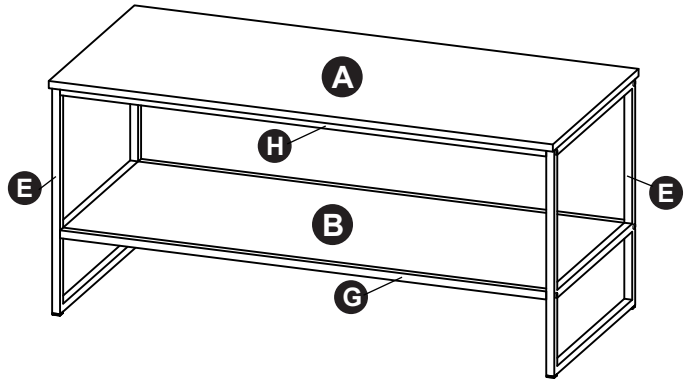

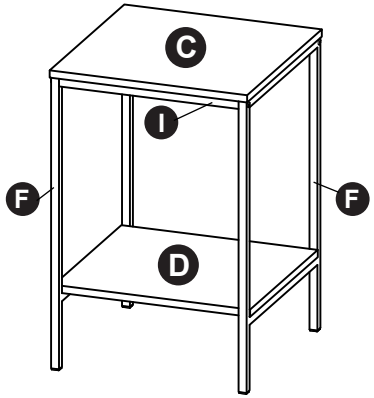

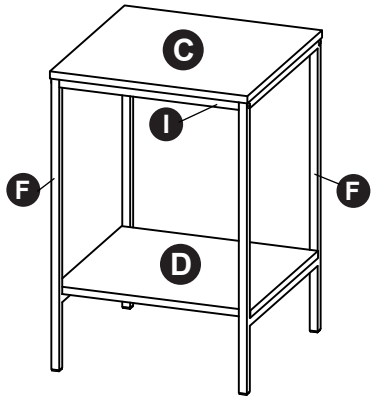

1 x 32  M4 x 25mm	2 x 6  M4 x 12mm
3 x 16  #11 x M6 x 30mm	4 x 1 

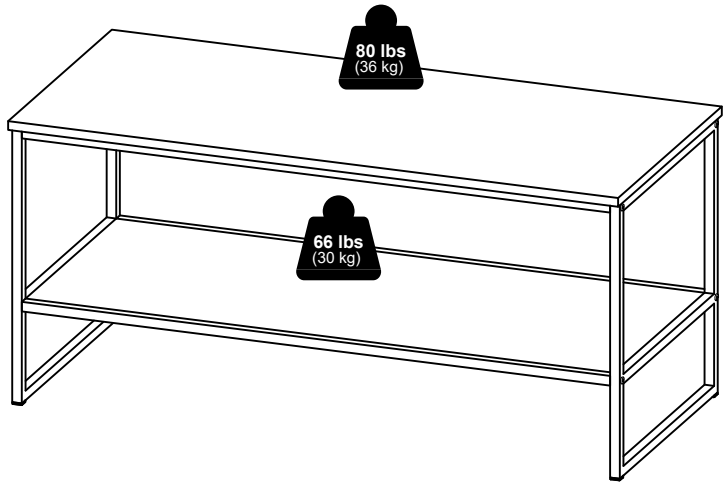

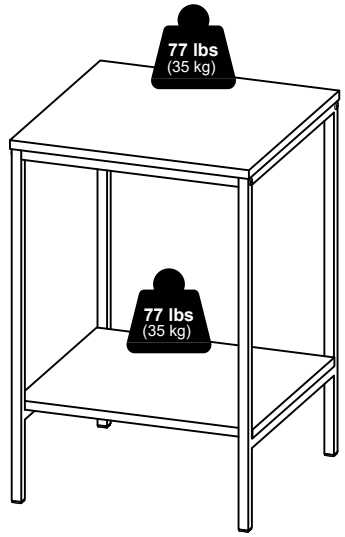

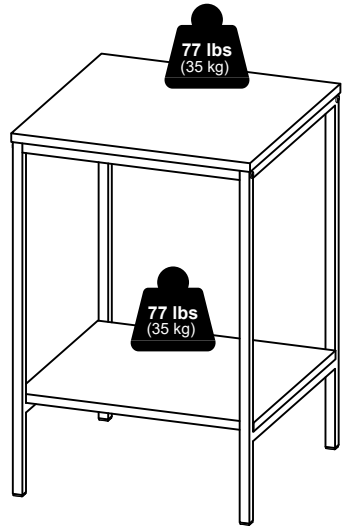

6

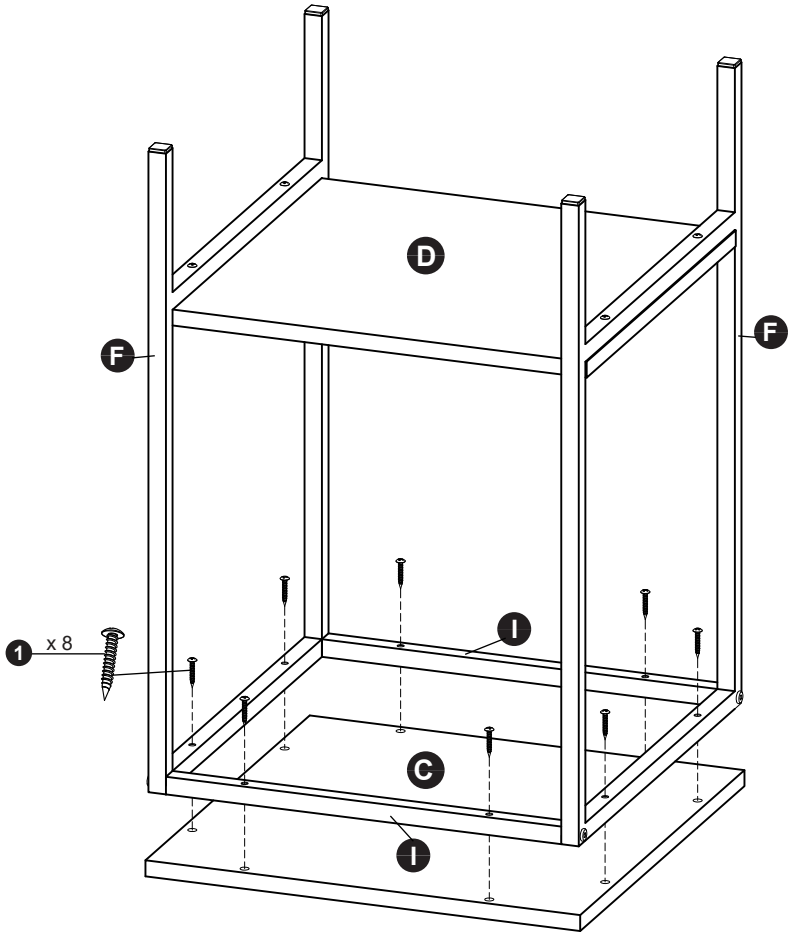

x 2

1

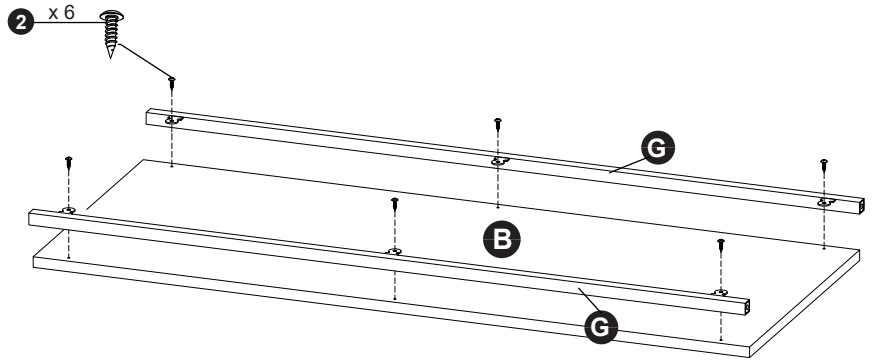

2

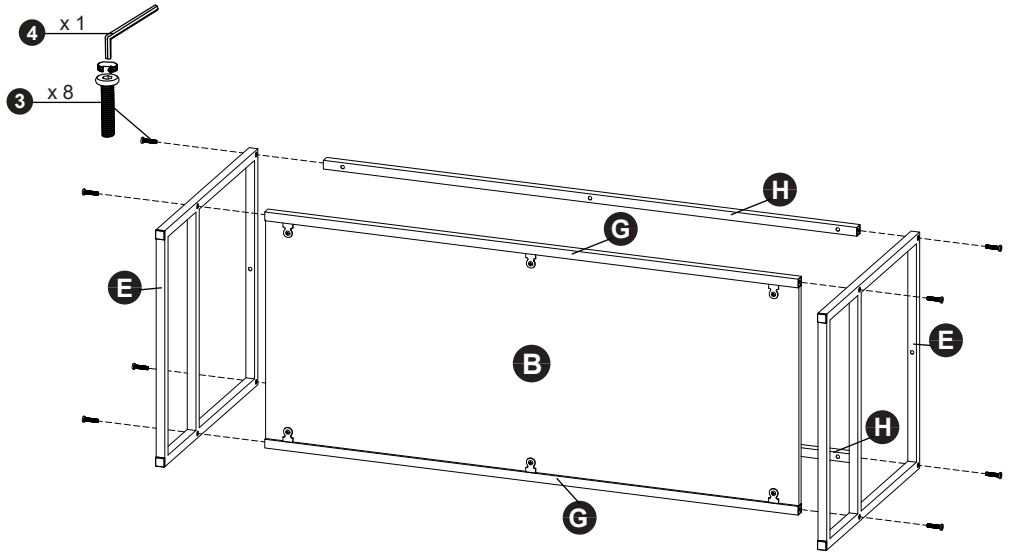

3

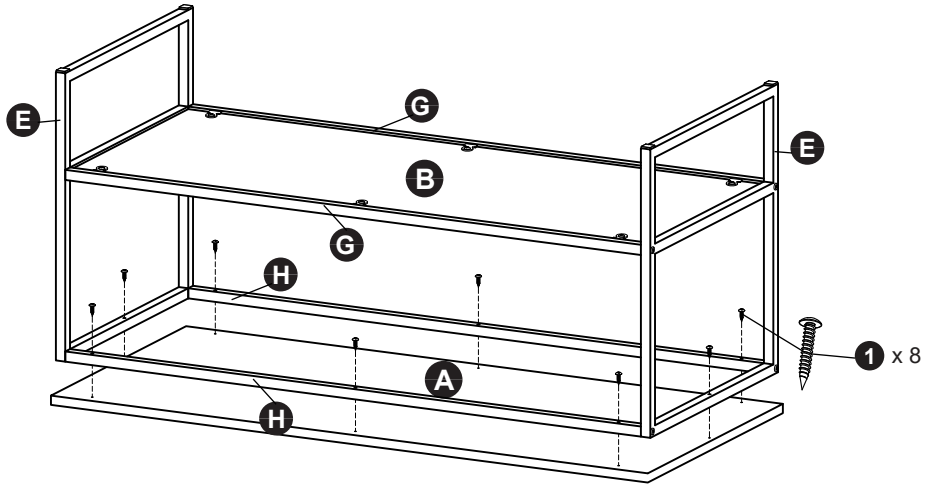

4

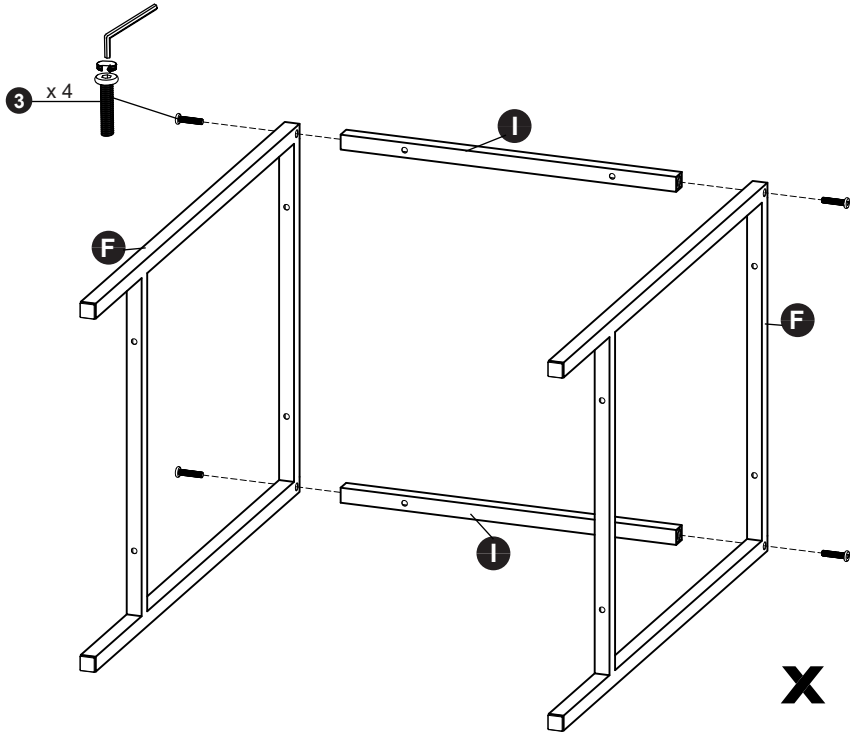

x 2

5

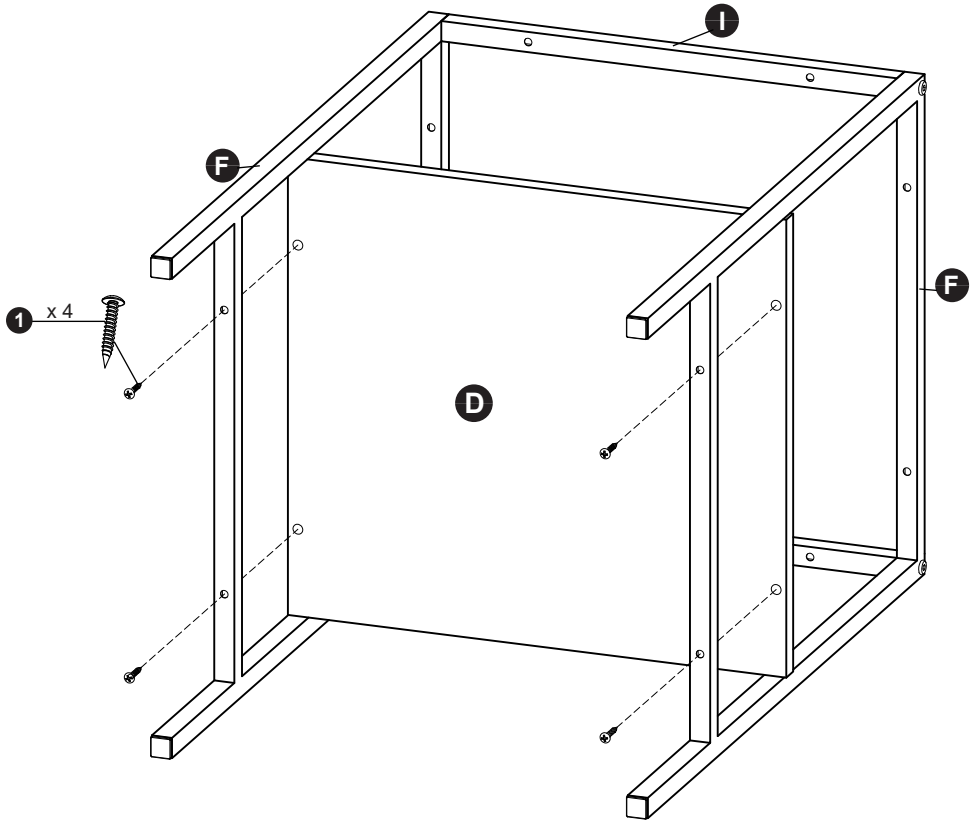

x 2