MODEL: FM4045ST-1

FURINNO MODERN END TABLE



Approx. 10 minutes

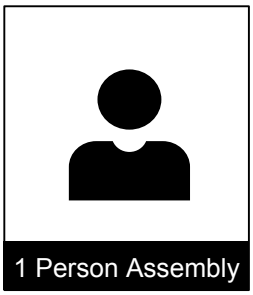
1 Person Assembly


No Tools Required

www.furinno.com

NEED HELP? For replacement requests or product inquiries, please contact our Customer Service Team by emailing us at **support@furinno.com**. Thank you for selecting Furinno!

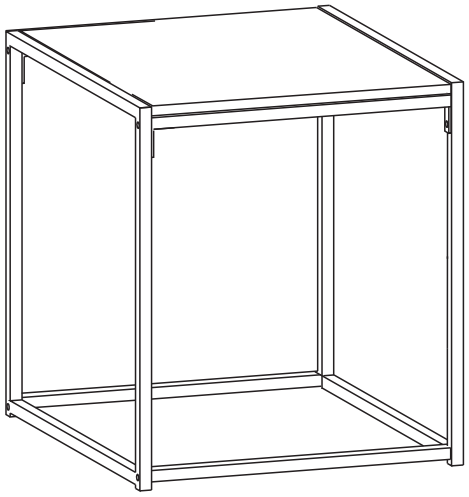

USEFUL HINTS BEFORE YOU START

1. Read each step carefully before assembling.
2. It is important that each step is performed in correct order to avoid difficulties.
3. Identify, sort and count the parts before assembly.
4. Assemble your furniture on packaging cardboard to prevent scratch or damage.
5. Clean the product with mild cleanser using soft damped cloth.
   Do not use harsh or abrasive cleanser.
6. Using uncompatible hardware might cause damage to product.

1x2pcs	2x2pcs	3x2pcs	4x1pc
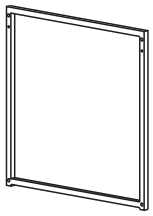			
Ax12pcs	**Bx4pcs**	**Cx2pcs**	
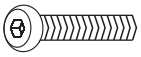 M6X25	 M6X12		

1

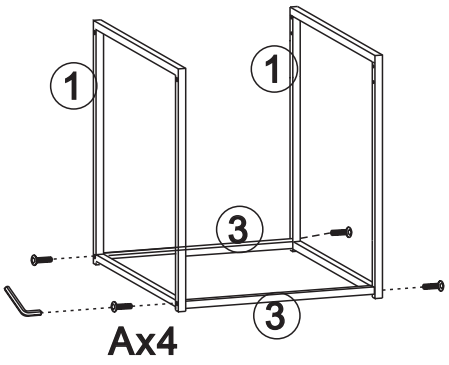

2

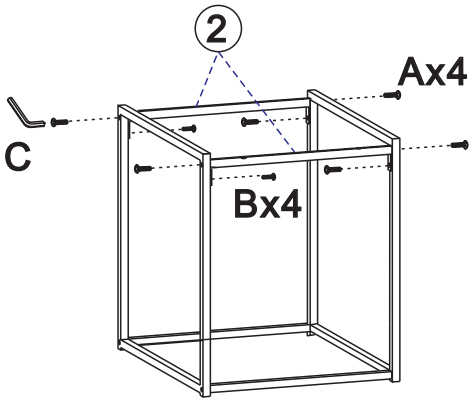

3

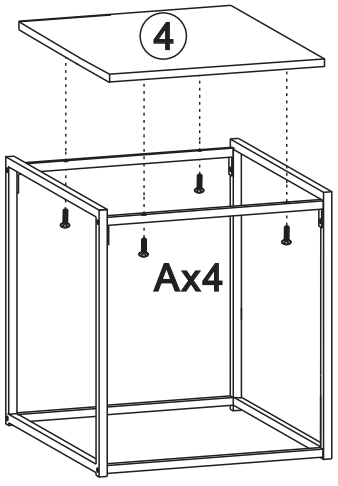

4

