MODEL: FM4045ST-2

FURINNO MODERN 2 TIER END TABLE



Approx. 10 minutes

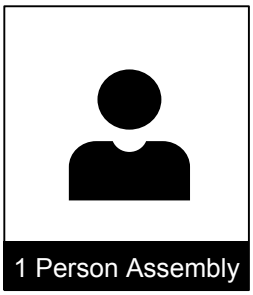
1 Person Assembly


No Tools Required

www.furinno.com

NEED HELP? For replacement requests or product inquiries, please contact our Customer Service Team by emailing us at **support@furinno.com**. Thank you for selecting Furinno!

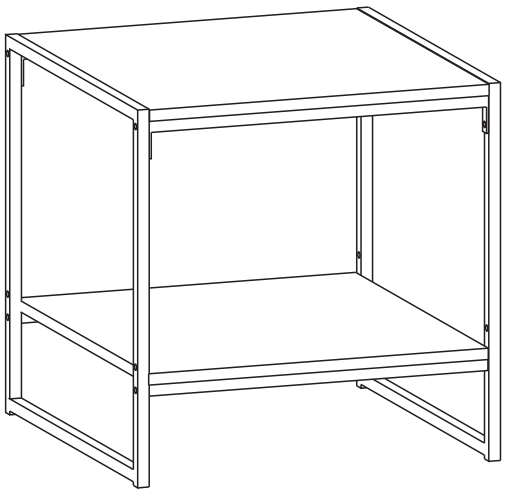

USEFUL HINTS BEFORE YOU START

1. Read each step carefully before assembling.
2. It is important that each step is performed in correct order to avoid difficulties.
3. Identify, sort and count the parts before assembly.
4. Assemble your furniture on packaging cardboard to prevent scratch or damage.
5. Clean the product with mild cleanser using soft damped cloth.
   Do not use harsh or abrasive cleanser.
6. Using uncompatible hardware might cause damage to product.

Ax2pcs	Bx2pcs	Cx2pcs	Dx2pcs	Ex16pcs	Fx4pcs	Gx1pc
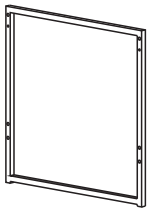				 M6x25	 M6x12	

1

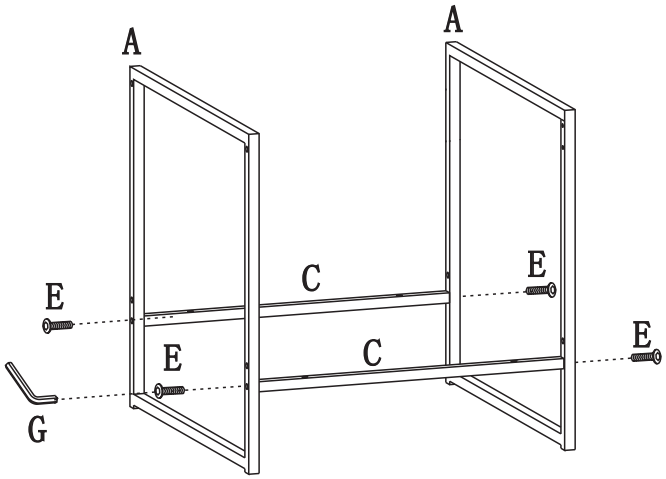

2

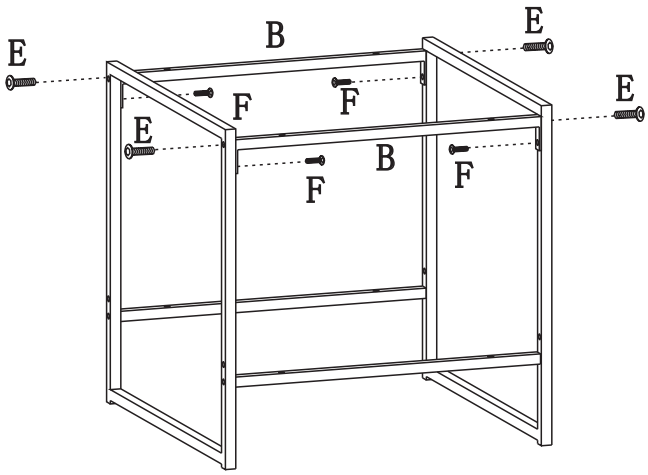

3

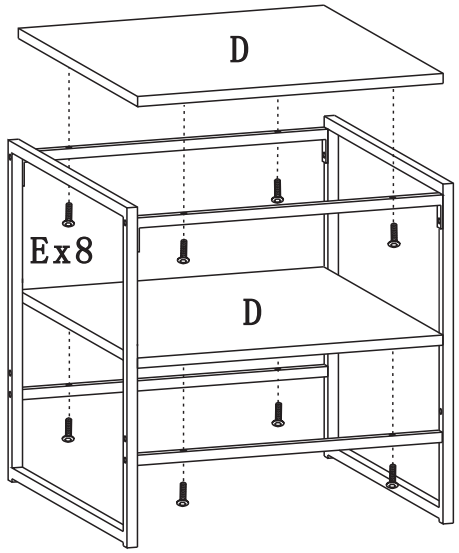

4

