FM6090

Furinno Metal Frame Rack, 3-Tier

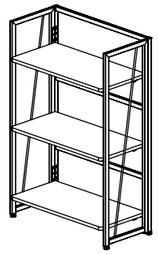

www.furinno.com

NEED HELP? For replacement requests or product inquiries, please contact our Customer Service Team by emailing us at **support@furinno.com**. Thank you for selecting Furinno!

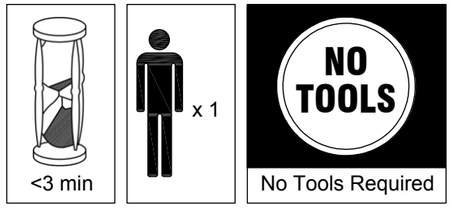

USEFUL HINTS BEFORE YOU START:

1. Read each step carefully before starting.
2. It is important that each step is performed in correct order to avoid difficulties.
3. Identify, sort and count the parts before assembly.
4. Assemble your furniture on packaging cardboard to prevent scratch or damage.
5. Clean the product with mild cleanser using soft damped cloth. Do not use harsh or abrasive cleanser.
6. Using uncompatible hardware might cause damage to product.

No.	Description	Qty.
1	Metal Frame	1
2	Panel Shelving	3

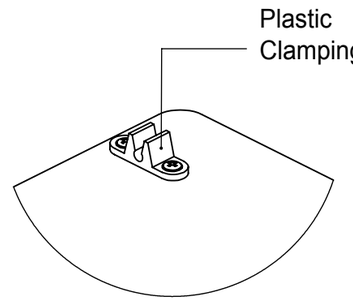

DETAIL A
SCALE 1:3

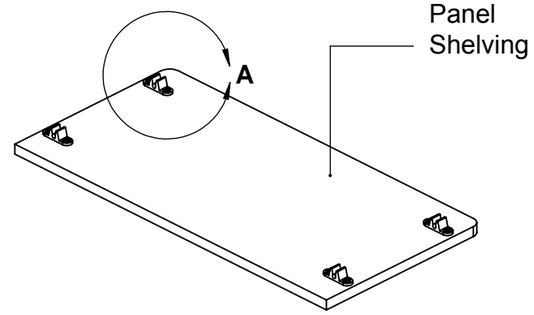

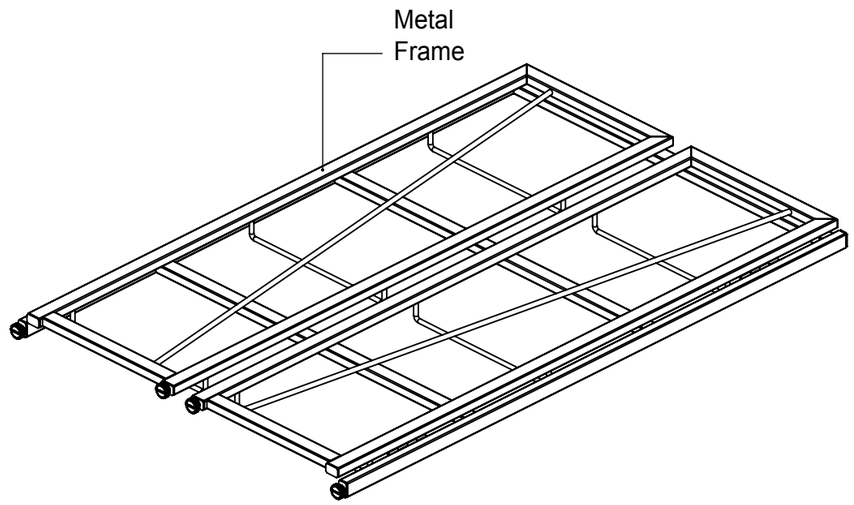

1

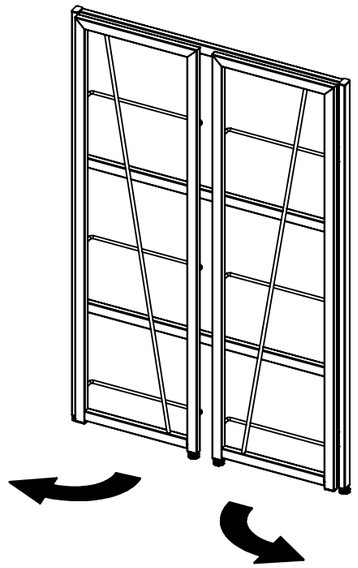

2

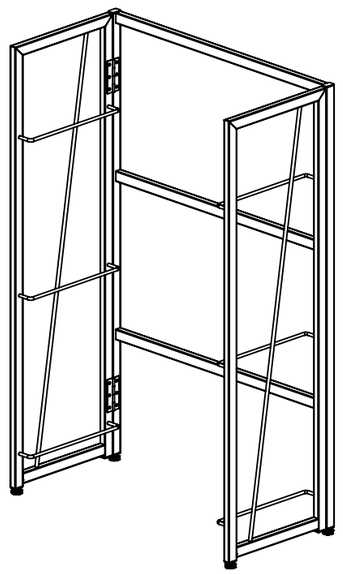

3

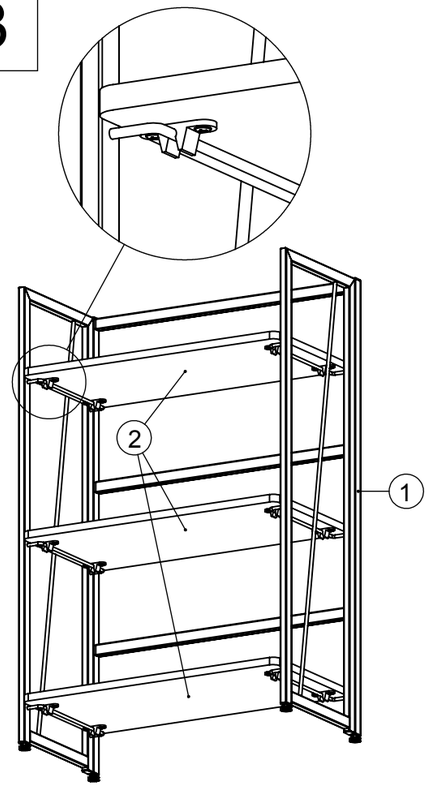

4

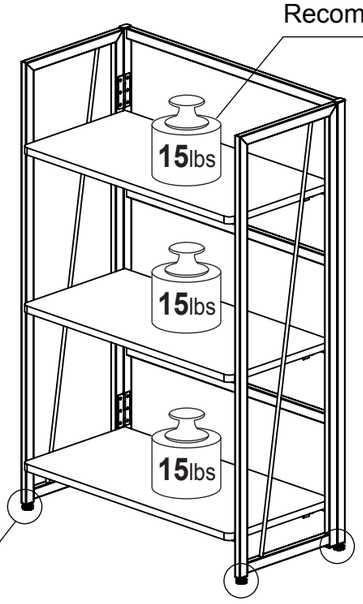

Note:
Adjust each leg leveler for better stability.