STEP 4

Connect assembled unit in Step 2 and Step 3 using Dowel (1).

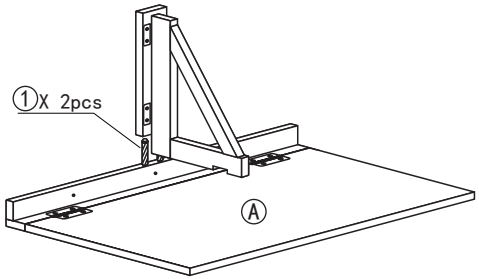

STEP 5

Mark the hole on wall before drill.
Drill Nut (2) into wall and tighten with Screw (2).

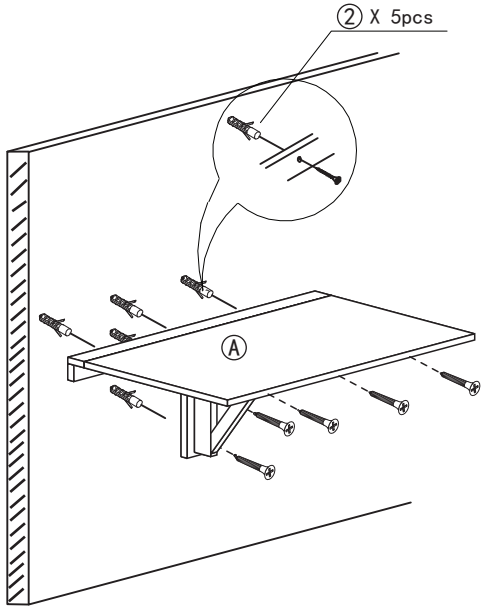

Recommended Maximum Weight

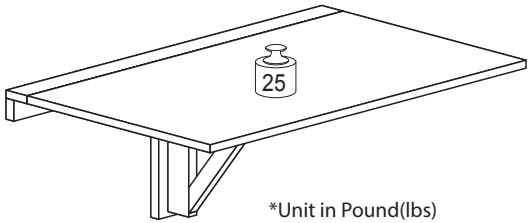

WARNING:

>This unit has been designed to support the maximum loads shown. Exceeding these load limits could cause sagging, instability, product collapse, and/or serious injury.

>DO NOT allow children to climb on unit.

Furinno®
Fits Space. Fits Budget

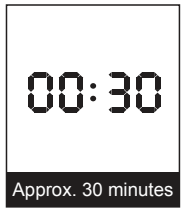





Assembly Instruction

Furinno Wall-Mounted Drop-Leaf Folding Table

MODEL : **FNAJ-11019**

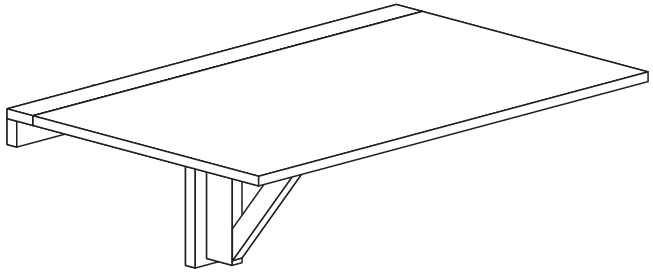

Customer Support

NEED HELP? For replacement requests or product inquiries, please contact our Customer Service Team by emailing us at **support@furinno.com**. Thank you for selecting Furinno!

www.furinno.com

FNAJ1101920180424

No	Hardware List	Qty
1	Dowel	4pcs
2	Screw/Nut	5pcs
3	Hinge	4pcs
4	Screw/Dowel Nut	3pcs

No	Parts List	Qty
A	Top Panel	1pc
B	Top Pole	1pc
C	Wall Long Pole	1pc
D	Wall Short Pole	1pc
E	Triangle Support	1pc

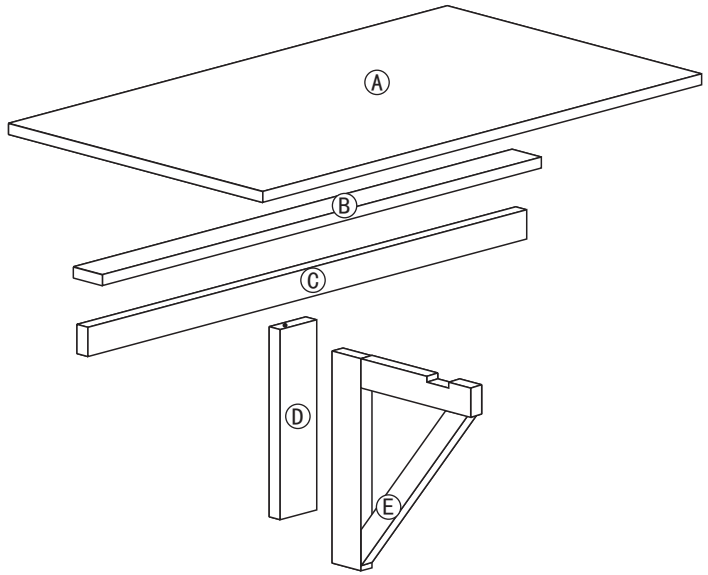

USEFUL HINTS BEFORE YOU START:

1. Read each step carefully before starting.
2. It is important that each step is performed in correct order to avoid difficulties.
3. Identify, sort and count the parts before assembly.
4. Assemble your furniture on packaging cardboard to prevent scratch or damage.
5. Clean the product with mild cleanser using soft damped cloth. Do not use harsh or abrasive cleanser.
6. Using uncompatible hardware might cause damage to product.

STEP 1

Insert Dowel (1) to Pole (B) and tighten Pole (B),(C) using Screw/Dowel Nut (4).

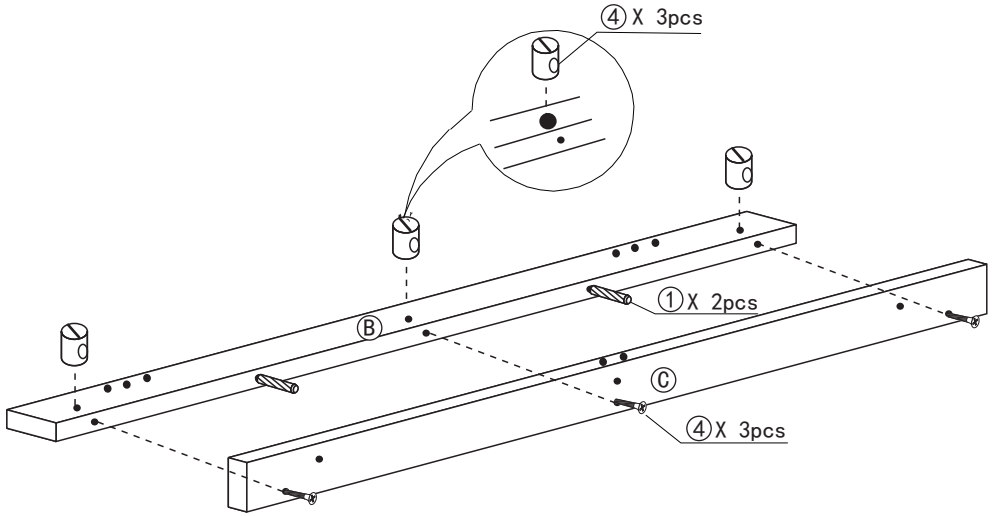

STEP 2

Attach Wall Long Pole (D) and Triangle Support (E) using Hinge (3).

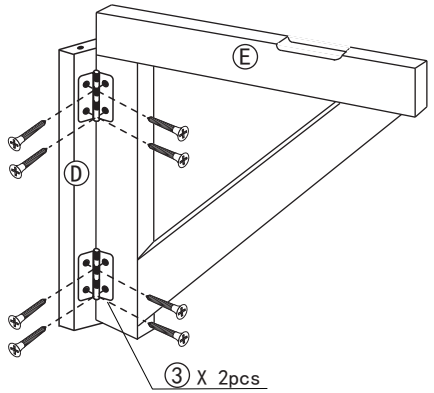

STEP 3

Attach Top Panel (A) to assembled unit in Step 1 using Hinge (3).

