STEP 3

Attach Top & Bottom Panel (A) to the assembled unit in Step 2 using Screw (1).

Note: The side of Top & Bottom Panel with back hanging piece should face same direction.

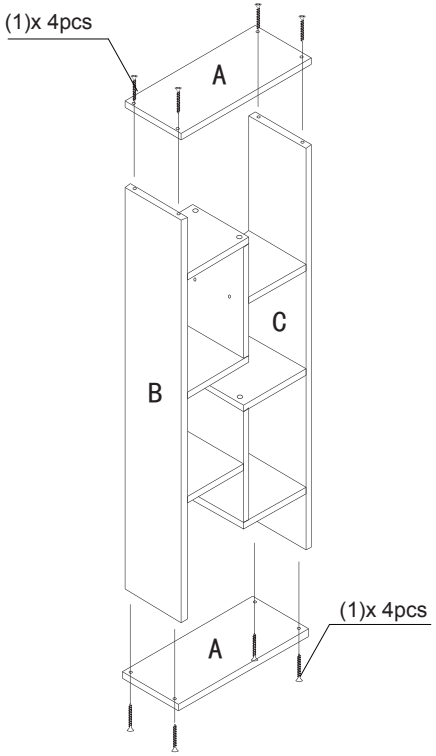

STEP 4

4.1 Cover Sticker (4) on screws head.

4.2 Hang assembled unit on the wall with Wall Screw/Anchor (5).
You can hang it either vertically or horizontally.

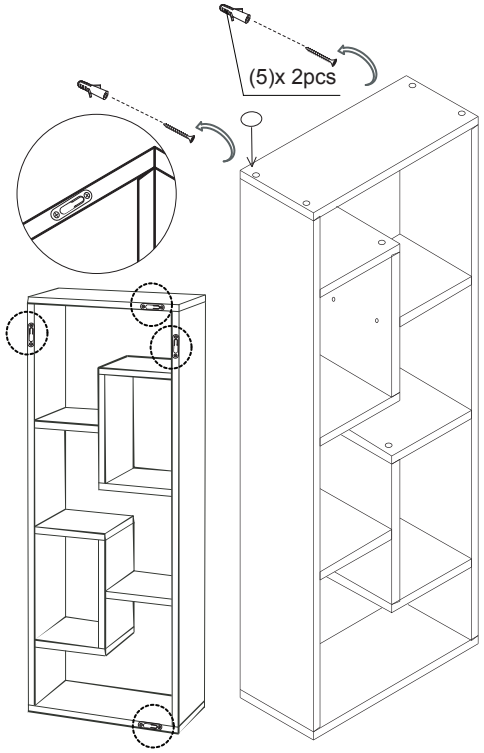

Recommended Maximum Weight

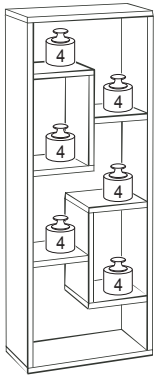

*Unit in Pound(lbs)

WARNING:

>This unit has been designed to support the maximum loads shown. Exceeding these load limits could cause sagging, instability, product collapse, and/or serious injury.

>DO NOT allow children to climb on unit.

>Put heavier items on lower shelves.

Furinno®
Fits Space. Fits Budget

Assembly Instruction

Furinno Boyate Five Wall Mounted Shelf
MODEL : **FNAJ-11033**

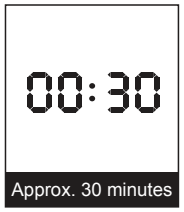

Approx. 30 minutes


Recomm. 1 Person


Tool Required

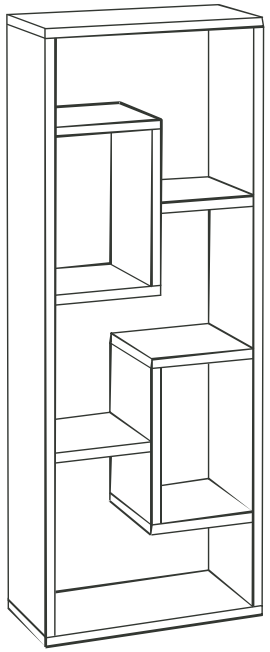

Customer Support

NEED HELP? For replacement requests or product inquiries, please contact our Customer Service Team by emailing us at **support@furinno.com**. Thank you for selecting Furinno!

www.furinno.com

FNAJ1103320180424

No	Hardware List	Qty
1	Screw	20pcs
2	Dowel	12pcs
3	Cam-Lock Screw/Nut	6pcs
4	Sticker	20pcs
5	Wall Screw/Anchor	2pcs

No	Parts List	Qty
A	Top & Bottom Panel	2pcs
B	Left Side Panel	1pc
C	Right Side Panel	1pc
D	Center Panel	2pcs
E	Long Shelf Panel	4pcs
F	Short Shelf Panel	2pcs

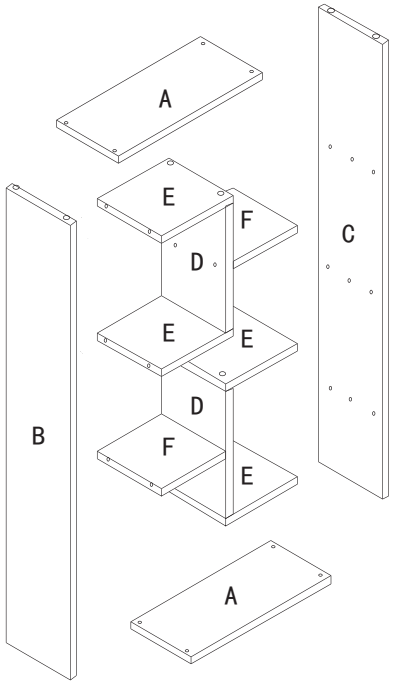

USEFUL HINTS BEFORE YOU START:

1. Read each step carefully before starting.
2. It is important that each step is performed in correct order to avoid difficulties.
3. Identify, sort and count the parts before assembly.
4. Assemble your furniture on packaging cardboard to prevent scratch or damage.
5. Clean the product with mild cleanser using soft damped cloth. Do not use harsh or abrasive cleanser.
6. Using uncompatible hardware might cause damage to product.

STEP 1

Attach Short Shelf Panel (F) and two piece of Long Shelf Panel (E) to Center Panel (D) using Screw (1).

Repeat this step twice with the other set of panels.

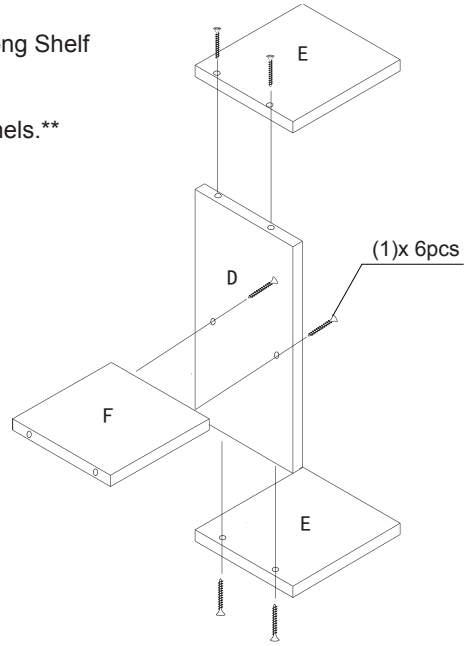

STEP 2

Attach L/R Side Panel (B)&(C) to the assembled unit in Step 1 using Cam-Lock Screw/Nut (3) and Dowel (2).

Note: The side of L/R Side Panel with back hanging piece should face the same direction.

