STEP 3

3.1 Attach L/R Top Panel (A) to Center Top Panel (B) with Hinge (4).
3.2 Install L-Brackets (7) to Center Top Panel (B) and Center Panel (C) using Screw (1).

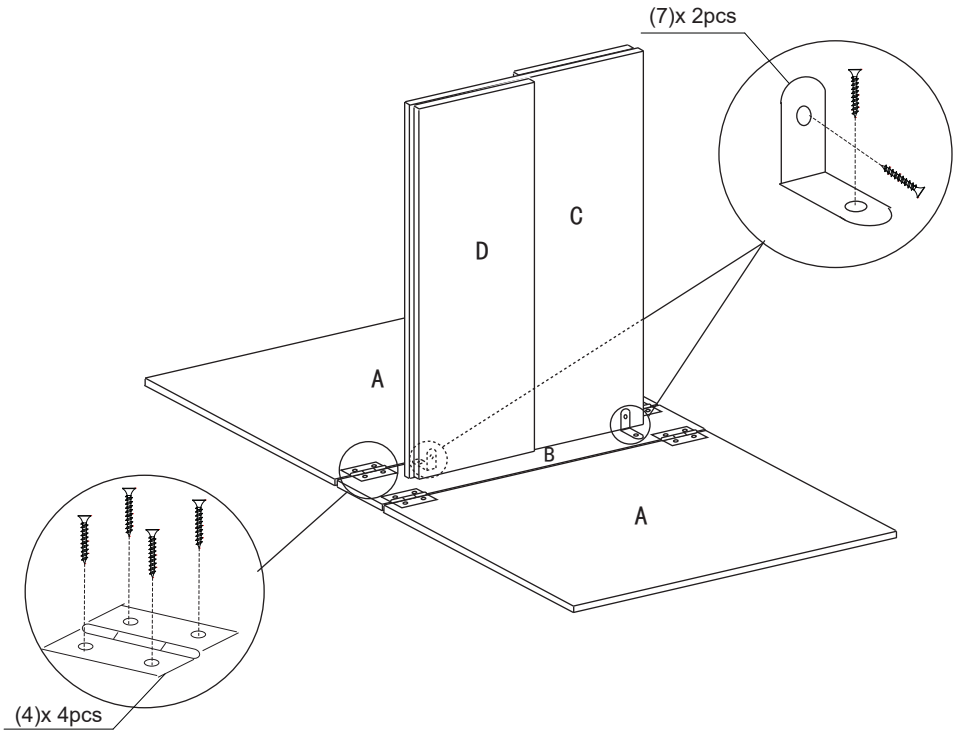

Recommended Maximum Weight

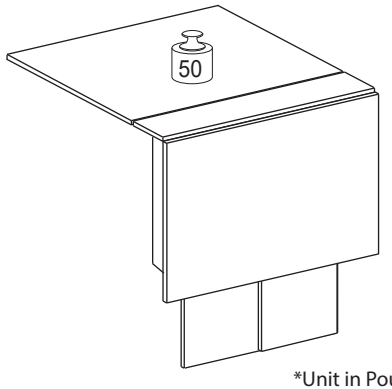

*Unit in Pound(lbs)

WARNING:

>This unit has been designed to support the maximum loads shown. Exceeding these load limits could cause sagging, instability, product collapse, and/or serious injury.

>DO NOT allow children to climb on unit.

>Put heavier items on lower shelves.

Furinno®
Fits Space. Fits Budget

Assembly Instruction

Furinno Boyate Special Simple Folding Table

MODEL : **FNAJ-11072**

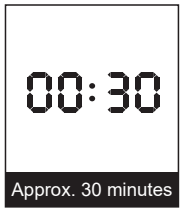

Approx. 30 minutes


Recomm. 2 Person


Tool Required

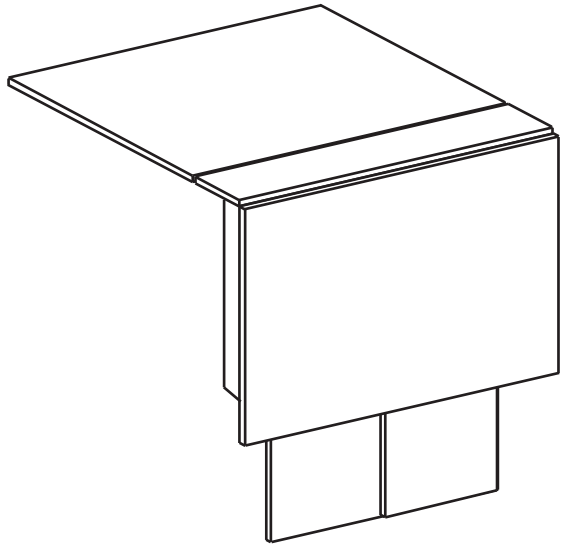

Customer Support

NEED HELP? For replacement requests or product inquiries, please contact our Customer Service Team by emailing us at **support@furinno.com**. Thank you for selecting Furinno!

www.furinno.com

FNAJ1107220180424

No	Hardware List	Qty
1	Screw	36pcs
2	Dowel	2pcs
3	Cam-Lock Screw/Nut	2pcs
4	Hinge	8pcs
5	Stopper	2pcs
6	Short Screw	8pcs
7	L-Bracket	2pcs

No	Parts List	Qty
A	L/R Top Panel	2pcs
B	Center Top Panel	1pc
C	Center Panel	1pc
D	L/R Bottom Panel	2pcs

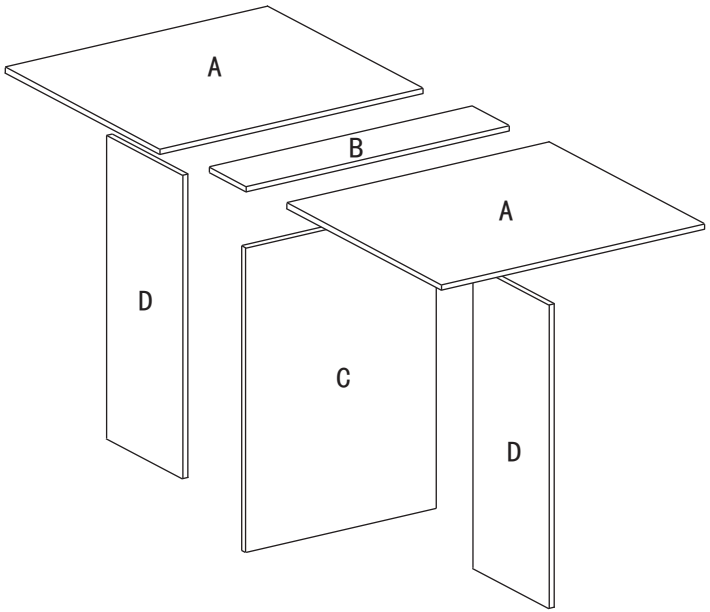

USEFUL HINTS BEFORE YOU START:

1. Read each step carefully before starting.
2. It is important that each step is performed in correct order to avoid difficulties.
3. Identify, sort and count the parts before assembly.
4. Assemble your furniture on packaging cardboard to prevent scratch or damage.
5. Clean the product with mild cleanser using soft damped cloth. Do not use harsh or abrasive cleanser.
6. Using uncompatible hardware might cause damage to product.

STEP 1

1.1 Install Stopper (5) to L/R Panel (D)with Short Screw (6), as shown in Picture (1).
1.2 Attach L/R Panel (D) to opposite side of Center Panel (C) with Screw (1) , as shown in Picture (2).

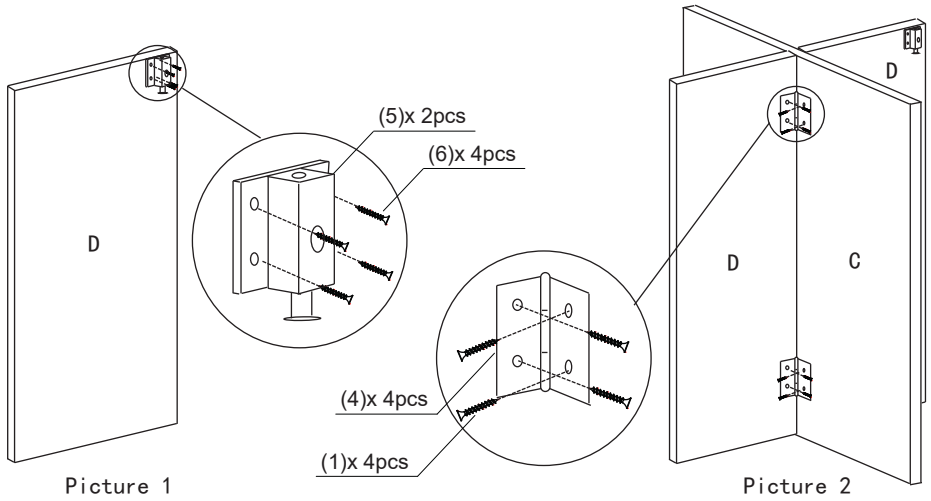

Picture 1 Picture 2

STEP 2

Attach Center Top Panel (B) to completed unit in Step 1 using Dowel (2) and Cam-Lock Screw/Nut (3).

