STEP 5

Attach Top Center Panel (F) to Large Shelf Panel (D) and Top Panel (C).Tighten Top Panel (C) to L/R-Side Panel (A)&(B) with Screw (1).

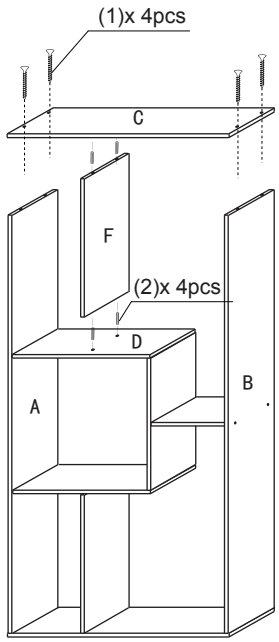

STEP 6

6.1 Cover Sticker (3) to the exposed screws for neat appearance.

6.2 Hang the completed unit to the wall with Wall Screw/Anchors (4).
You can hang it either horizontally or vertically.

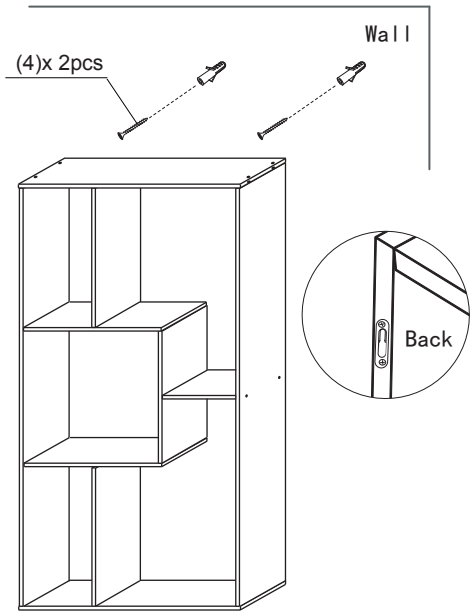

Recommended Maximum Weight

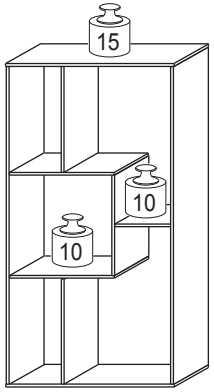

*Unit in Pound(lbs)

WARNING:

>This unit has been designed to support the maximum loads shown. Exceeding these load limits could cause sagging, instability, product collapse, and/or serious injury.

>DO NOT allow children to climb on unit.

>Put heavier items on lower shelves.

Furinno®
Fits Space. Fits Budget

Assembly Instruction

Furinno Boyate Magic Cube Five Grid Storage Rack

MODEL : **FNAJ-11073**

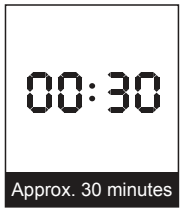





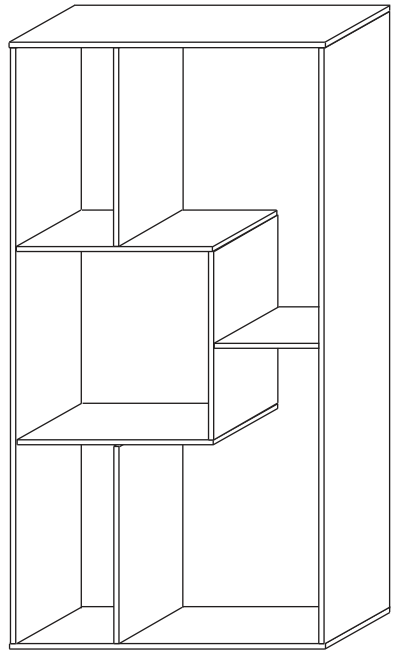

Customer Support

NEED HELP? For replacement requests or product inquiries, please contact our Customer Service Team by emailing us at **support@furinno.com**. Thank you for selecting Furinno!

www.furinno.com

FNAJ1107320180424

No	Hardware List	Qty
1	Screw	20pcs
2	Dowel	8pcs
3	Sticker	20pcs
4	Wall Screw / Anchor	2pcs

No	Parts List	Qty
A	L-Side Panel	1pc
B	R-Side Panel	1pc
C	Top Panel	1pc
D	Large Shelf Panel	2pcs
E	Small Shelf Panel	1pc
F	Top/Bottom Center Panel	2pcs
G	Middle Center Panel	1pc
H	Bottom Panel	1pc

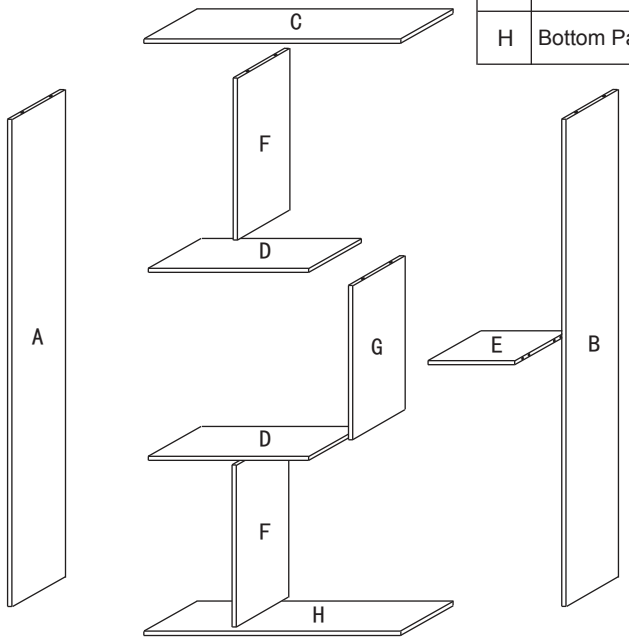

USEFUL HINTS BEFORE YOU START:

1. Read each step carefully before starting.
2. It is important that each step is performed in correct order to avoid difficulties.
3. Identify, sort and count the parts before assembly.
4. Assemble your furniture on packaging cardboard to prevent scratch or damage.
5. Clean the product with mild cleanser using soft damped cloth. Do not use harsh or abrasive cleanser.
6. Using uncompatible hardware might cause damage to product.

STEP 1

Attach Large Shelf Panel (D), Small Shelf Panel (E) to Middle Center Panel (G) using Screw (1).

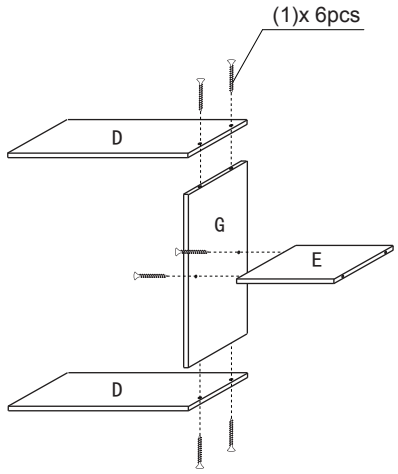

STEP 2

Attach L-Side Panel (A) to Large Shelf Panel (D) using Screw (1).

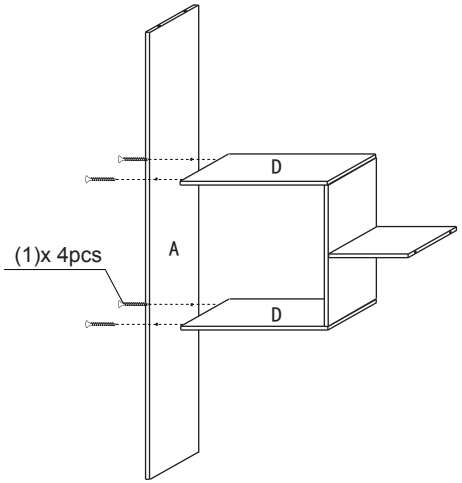

STEP 3

Attach R-Side Panel (B) to Small Shelf Panel (E) using Screw (1).

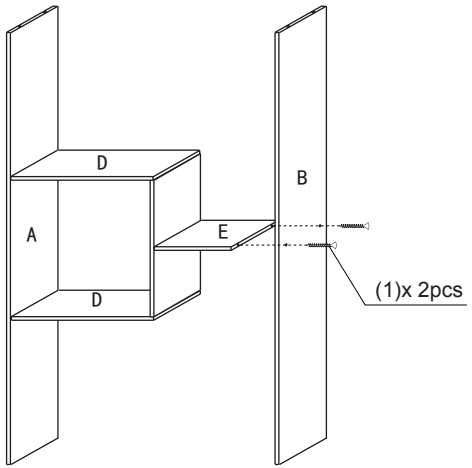

STEP 4

4.1 Attach Bottom Center Panel (F) to Large Shelf Panel (D) and Bottom Panel (H) using Dowel (2).

4.2 Tighten Bottom Panel(H) to L/R-Side Panel (A), (B) using Screw (1).

