STEP 3

Attach Top/Bottom Panel (A) to the assembled unit by using Dowel (1) and Cam-Lock Screw/Nut (2), as shown.

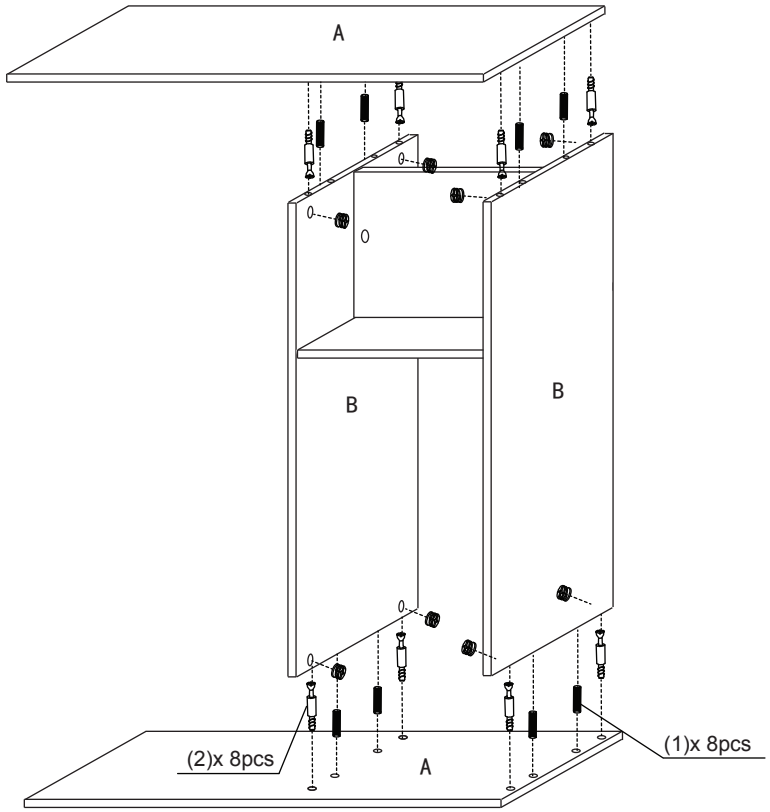

Recommended Maximum Weight

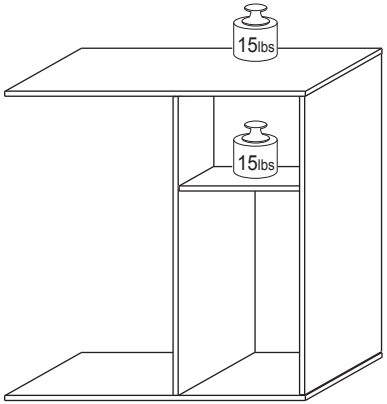

WARNING:

>This unit has been designed to support the maximum loads shown. Exceeding these load limits could cause sagging, instability, product collapse, and/or serious injury.

>DO NOT allow children to climb on unit.

>Put heavier items on lower shelves.

Furinno®

Fits Space. Fits Budget

Assembly Instruction

Furinno Boyate Sofa Side Table

MODEL : **FNAJ-11102**

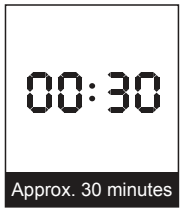

Approx. 30 minutes



Recomm. 1 Person



Tool Required

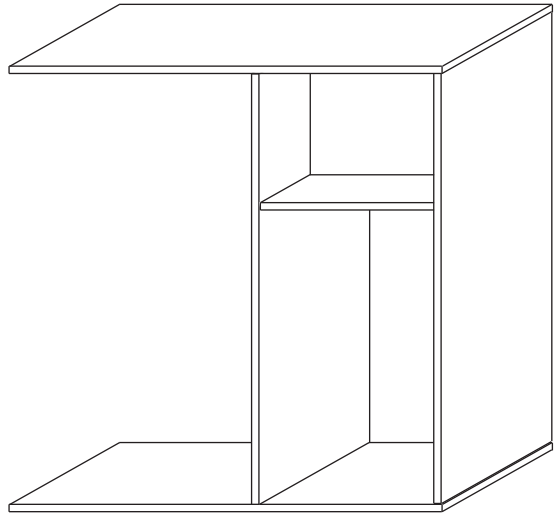

Customer Support

NEED HELP? For replacement requests or product inquiries, please contact our Customer Service Team by emailing us at **support@furinno.com**. Thank you for selecting Furinno!

www.furinno.com

FNAJ1110220180725

No	Hardware List	Qty
1	Dowel	16pcs
2	Cam-Lock Screw/Nut (2A, 2B)	12pcs

No	Parts List	Qty
A	Top/ Bottom Panel	2pcs
B	Left/Right Panel	2pcs
C	Shelf Panel	1pc
D	Center Panel	1pc

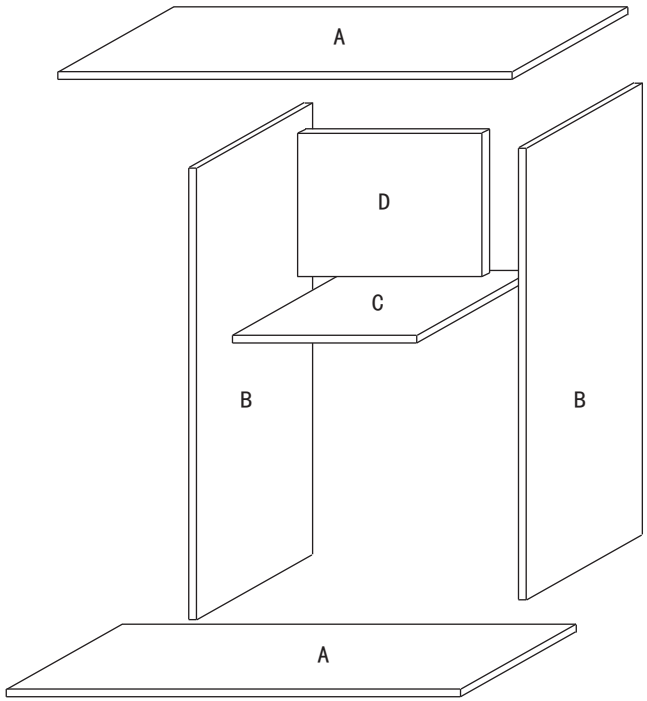

USEFUL HINTS BEFORE YOU START:

1. Read each step carefully before starting.
2. It is important that each step is performed in correct order to avoid difficulties.
3. Identify, sort and count the parts before assembly.
4. Assemble your furniture on packaging cardboard to prevent scratch or damage.
5. Clean the product with mild cleanser using soft damped cloth. Do not use harsh or abrasive cleanser.
6. Using uncompatible hardware might cause damage to product.

STEP 1

1.1 Insert Cam-Lock Nut (2B) into Panel (C&D).
1.2 Insert Cam-Lock Screw (2A) and Dowel (1) into Left Panel (B).
1.3 Attach Panel (C&D) to Left Panel (B) as shown.

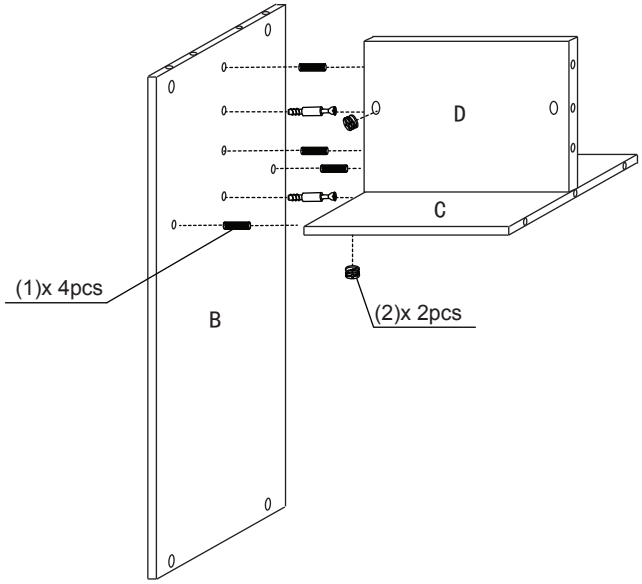

STEP 2

Attach the assembled unit to the Right Side Panel (B) as in Step 1.

