STEP 4

Attach Back Support Panel (E) to Bottom Panel (C) using Screw (1).

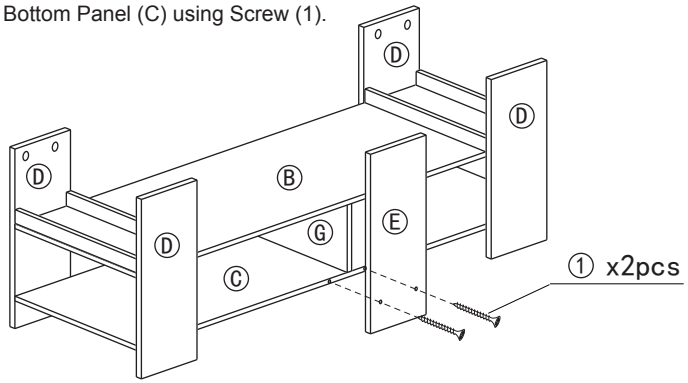

STEP 5

5.1 Insert Cam-Lock Screw (2) to Top Panel (A).
5.2 Attach Top Panel (A) to completed unit in Step 4 and tighten with Cam-Lock Nut (2).

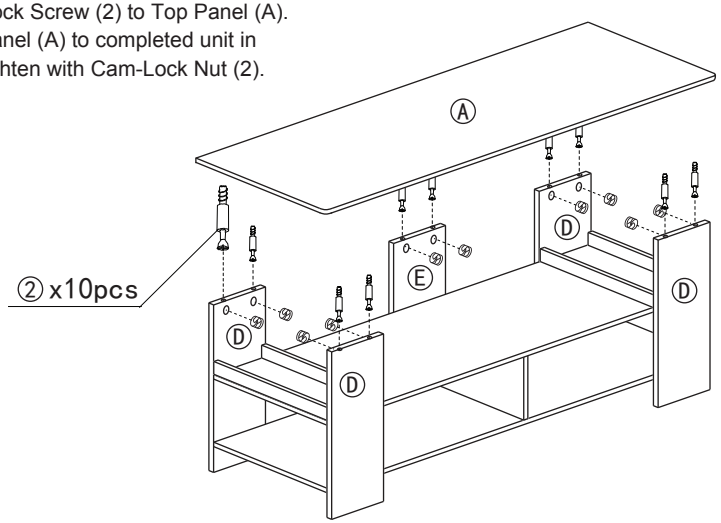

Recommended Maximum Weight

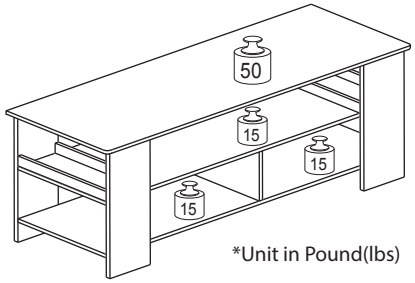

WARNING:

>This unit has been designed to support the maximum loads shown. Exceeding these load limits could cause sagging, instability, product collapse, and/or serious injury.

>DO NOT allow children to climb on unit.

>Put heavier items on lower shelves.

Furinno®
Fits Space. Fits Budget

Assembly Instruction

Furinno Boyate TV Entertainment Stand

MODEL : **FNAJ-11109**

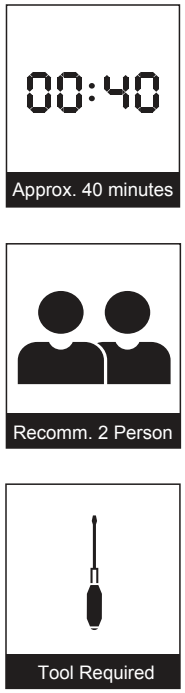

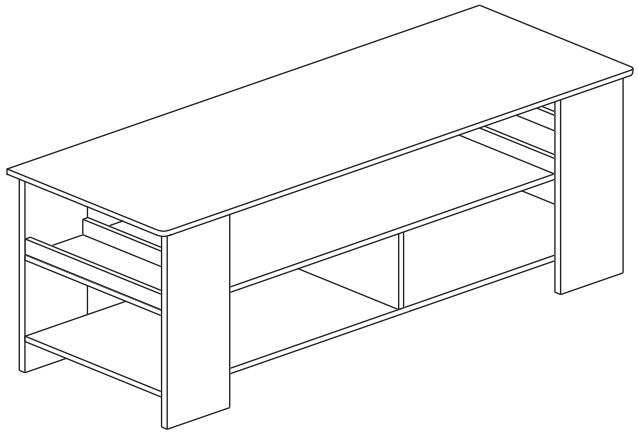

Customer Support

NEED HELP? For replacement requests or product inquiries, please contact our Customer Service Team by emailing us at **support@furinno.com**. Thank you for selecting Furinno!

www.furinno.com

FNAJ1110920180424

No	Hardware List	Qty
1	Screw	2pcs
2	Cam-Lock Screw/Nut	30pcs
3	Dowel	20pcs

No	Parts List	Qty
A	Top Panel	1pc
B	Shelf Panel	1pc
C	Bottom Panel	1pc
D	Support Panel	4pcs
E	Back Support Panel	1pc
F	Connector Panel	4pcs
G	Divider Panel	1pc

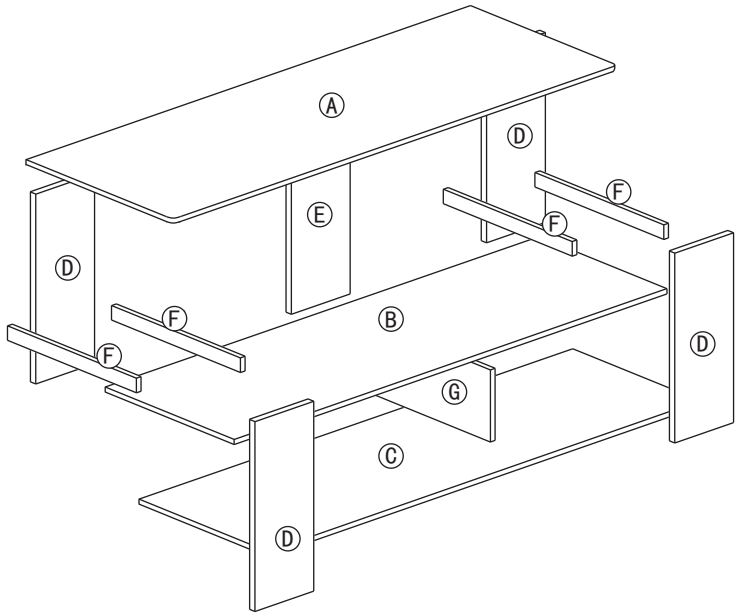

USEFUL HINTS BEFORE YOU START:

1. Read each step carefully before starting.
2. It is important that each step is performed in correct order to avoid difficulties.
3. Identify, sort and count the parts before assembly.
4. Assemble your furniture on packaging cardboard to prevent scratch or damage.
5. Clean the product with mild cleanser using soft damped cloth. Do not use harsh or abrasive cleanser.
6. Using uncompatible hardware might cause damage to product.

STEP 1

Attach Panel (B), (C) and (G) using Cam-Lock Screw/Nut (2) and Dowel (3).

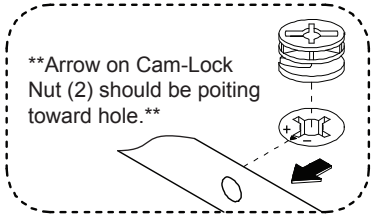

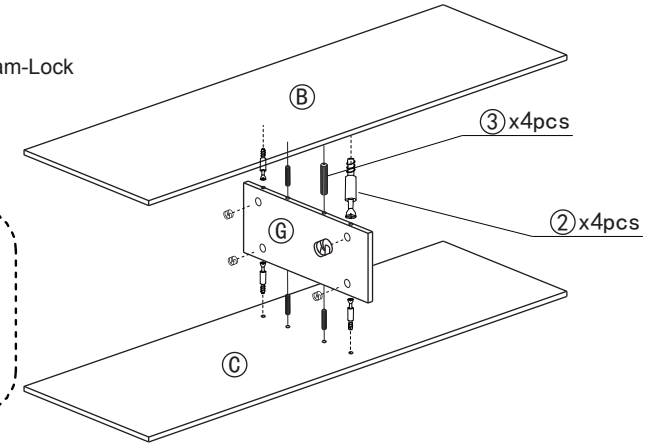

STEP 2

Attach Connector Panel (F) on Shelf Panel (B) using Dowel (3).

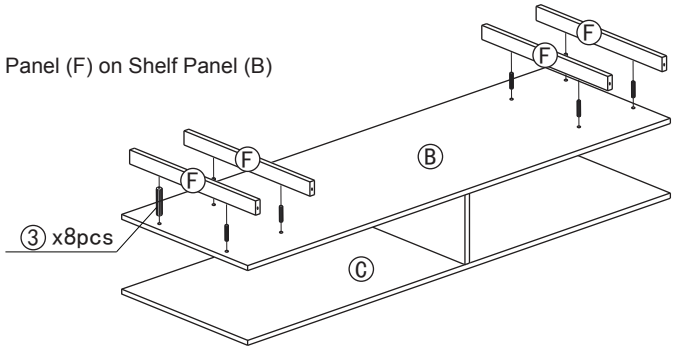

STEP 3

3.1 Insert Cam-Lock Screw (2) and Dowel (3) to Support Panel (D).
3.2 Attach Support Panel (D) to the completed unit in Step 2 and tighten with Cam-Lock Nut (2).

