STEP 2

Attach Right Support (A) with the assembled unit in Step 1 using Screw/Dowel Nut (1).

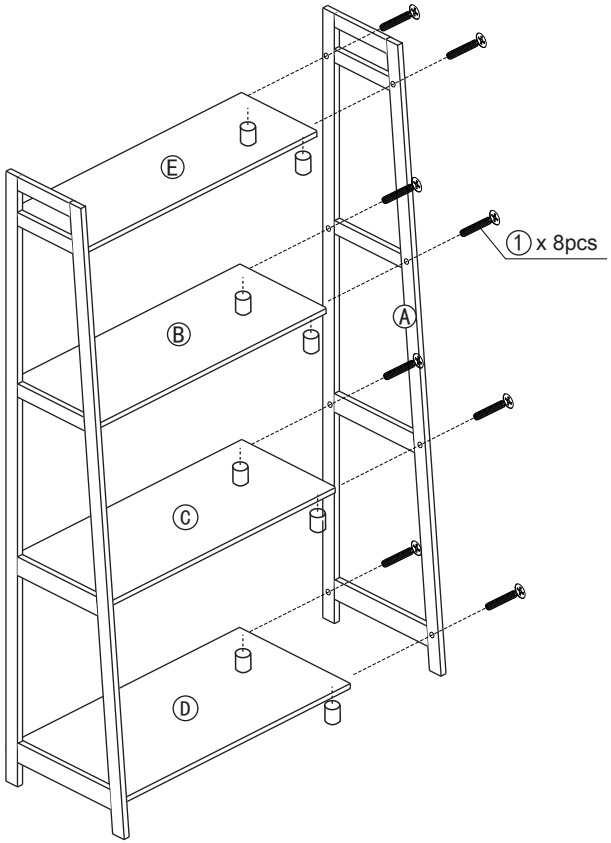

Recommended Maximum Weight

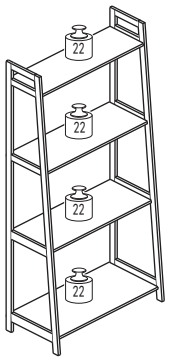

*Unit in Pound(lbs)

WARNING:

>This unit has been designed to support the maximum loads shown. Exceeding these load limits could cause sagging, instability, product collapse, and/or serious injury.

>DO NOT allow children to climb on unit.

Furinno®
Fits Space. Fits Budget

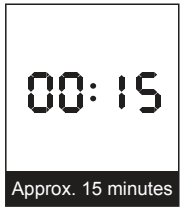

Approx. 15 minutes


Recomm. 1 Person


Tool Required

Assembly Instruction

Furinno 4-Tier Shelf
MODEL : **FNAJ-11298**

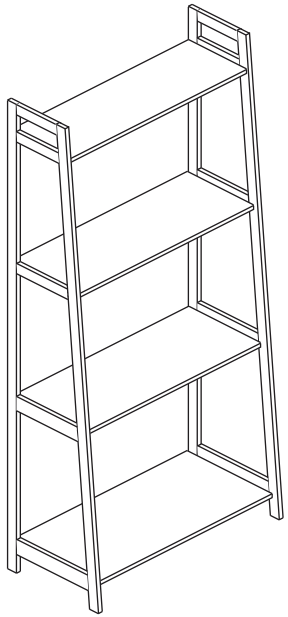

Customer Support

NEED HELP? For replacement requests or product inquiries, please contact our Customer Service Team by emailing us at **support@furinno.com**. Thank you for selecting Furinno!

www.furinno.com

FNAJ-1129820180731

No	Hardware List	Qty
1	Screw/Dowel Nut	16pcs

No	Parts List	Qty
A	Left/Right Support	2pcs
B	Shelf Panel 1	1pc
C	Shelf Panel 2	1pc
D	Shelf Panel 3	1pc
E	Shelf Panel 4	1pc

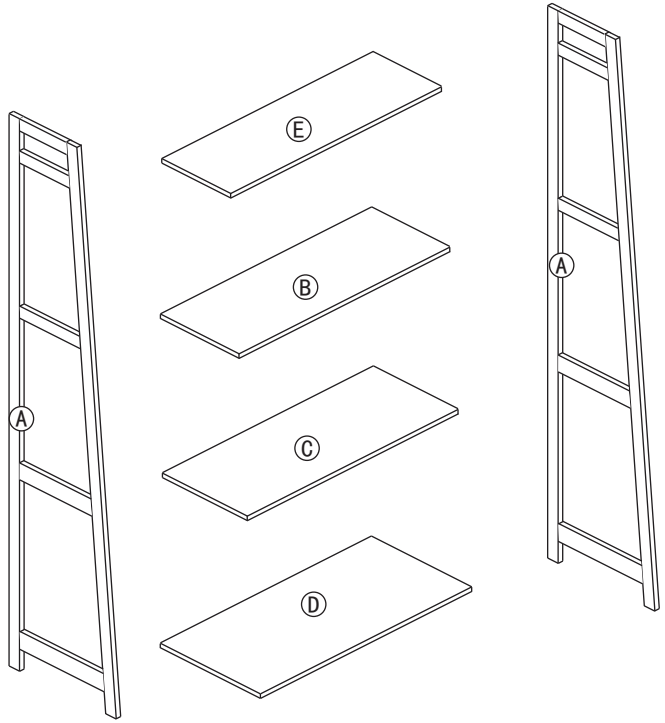

USEFUL HINTS BEFORE YOU START:

1. Read each step carefully before starting.
2. It is important that each step is performed in correct order to avoid difficulties.
3. Identify, sort and count the parts before assembly.
4. Assemble your furniture on packaging cardboard to prevent scratch or damage.
5. Clean the product with mild cleanser using soft damped cloth. Do not use harsh or abrasive cleanser.
6. Using uncompatible hardware might cause damage to product.

STEP 1

Attach Shelf Panel (B), (C), (D), (E) with Left Support (A) using Screw/Dowel Nut (1).

