Recommended Maximum Weight

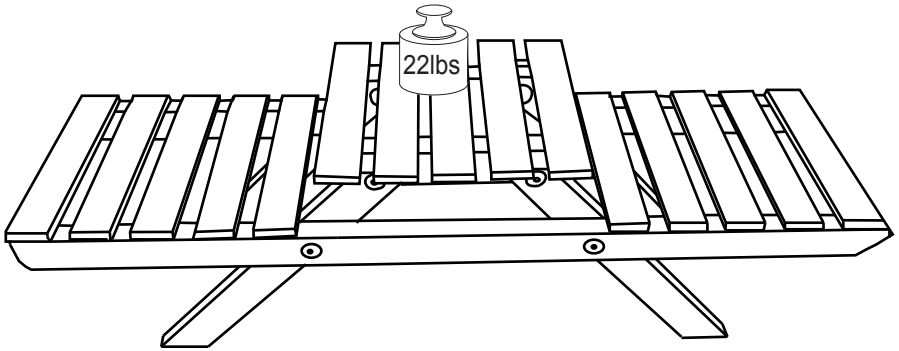

WARNING:

>This unit has been designed to support the maximum loads shown. Exceeding these load limits could cause sagging, instability, product collapse, and/or serious injury.

>DO NOT allow children to climb on unit.

Furinno®
Fits Space. Fits Budget

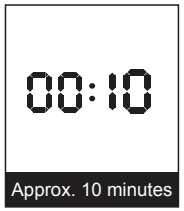





Assembly Instruction

Furinno Plant Shelf
MODEL : **FNAJ-33145**

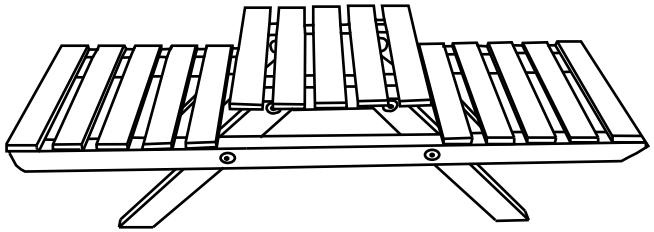

Customer Support

NEED HELP? For replacement requests or product inquiries, please contact our Customer Service Team by emailing us at **support@furinno.com**. Thank you for selecting Furinno!

www.furinno.com

No	Hardware List	Qty
1	Screw	8pcs
2	Allen Wrench	1pc

No	Parts List	Qty
A	Upper Shelf Panel	1pc
B	Lower Shelf Panel	1pc
C	Left Stand Leg	2pcs
D	Right Stand Leg	2pcs

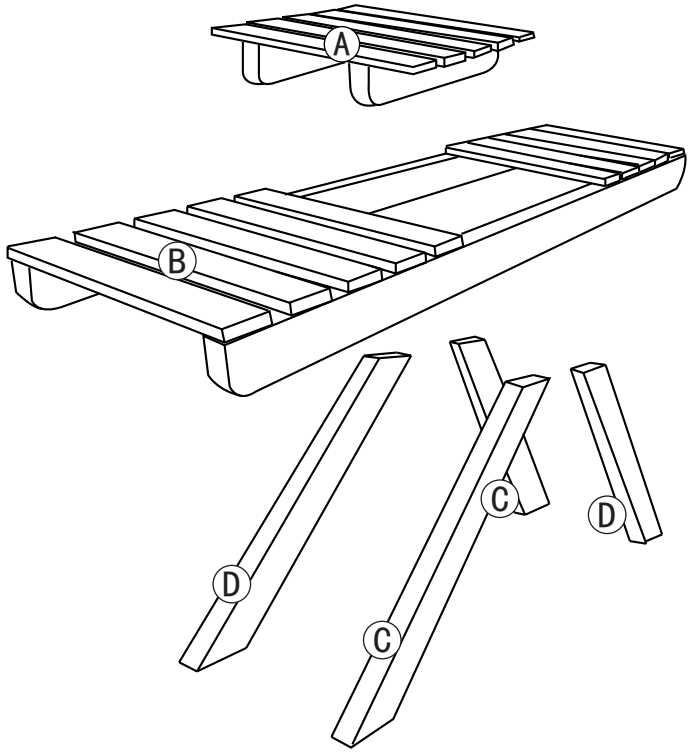

USEFUL HINTS BEFORE YOU START:

1. Read each step carefully before starting.
2. It is important that each step is performed in correct order to avoid difficulties.
3. Identify, sort and count the parts before assembly.
4. Assemble your furniture on packaging cardboard to prevent scratch or damage.
5. Clean the product with mild cleanser using soft damped cloth. Do not use harsh or abrasive cleanser.
6. Using uncompatible hardware might cause damage to product.

STEP 1

Attach L/R Stand Leg (C,D) with Lower Shelf Panel (B) using Screw (1).

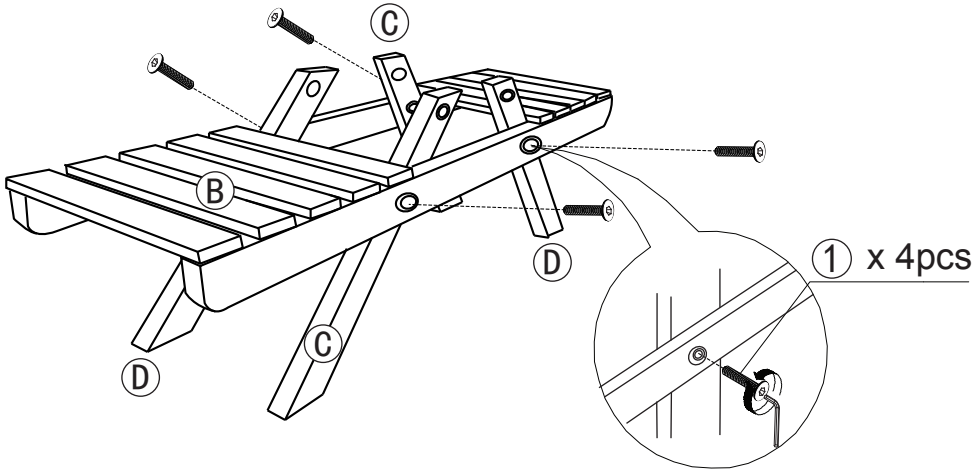

STEP 2

Attach Upper Shelf Panel (A) to the assembled unit in Step 1 using Screw (1).

