STEP 3

Install Caster w/Stopper (3) and Caster (4) to the bottom of the U-Shaped Support (C).
** Caster w/Stoppers (4) should be install to the front of product, as shown.**

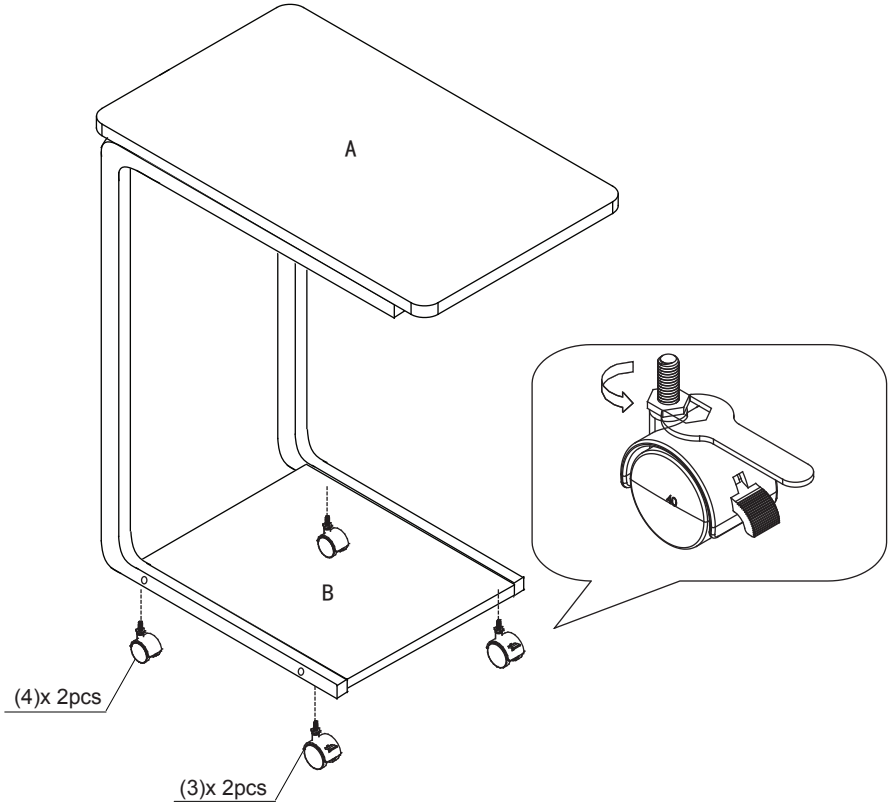

Recommended Maximum Weight

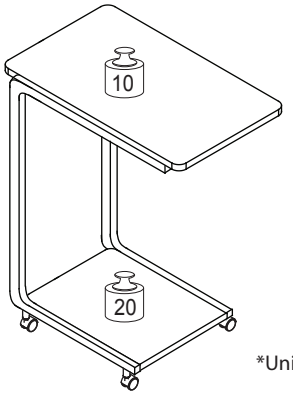

*Unit in Pound(lbs)

WARNING:

>This unit has been designed to support the maximum loads shown. Exceeding these load limits could cause sagging, instability, product collapse, and/or serious injury.

>DO NOT allow children to climb on unit.

>Put heavier items on lower shelves.

Furinno®
Fits Space. Fits Budget

Assembly Instruction

Furinno B&W U-Shaped Laptop Desk

MODEL : **FNBJ-22032**

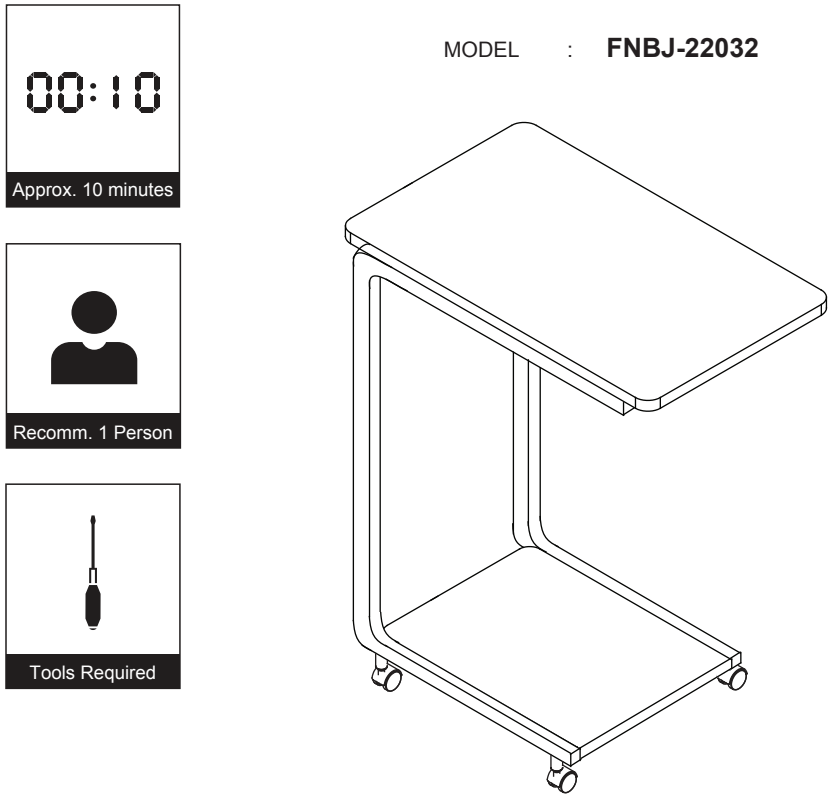

Customer Support

NEED HELP? For replacement requests or product inquiries, please contact our Customer Service Team by emailing us at **support@furinno.com**. Thank you for selecting Furinno!

www.furinno.com

FNBJ2203220180424

No	Hardware List	Qty
1	Screw/Dowel Nut	4pcs
2	Screw	4pcs
3	Caster w/Stopper	2pcs
4	Caster	2pcs
5	Spanner	1pc

No	Parts List	Qty
A	Top Panel	1pc
B	Bottom Panel	1pc
C	U-Shape Support	2pcs

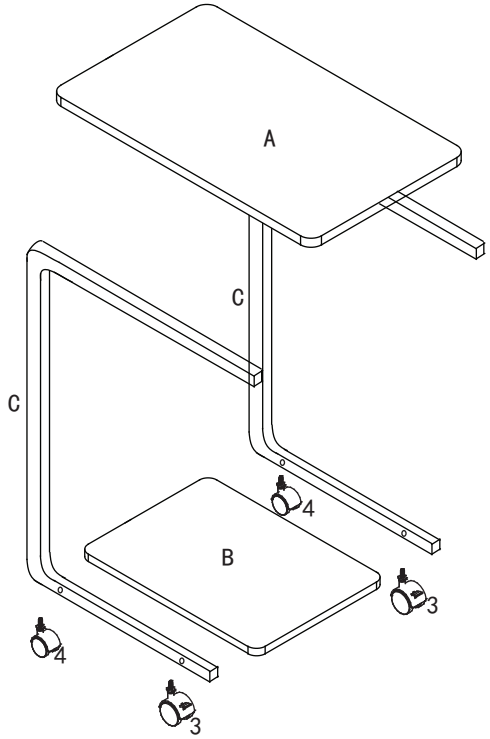

USEFUL HINTS BEFORE YOU START:

1. Read each step carefully before starting.
2. It is important that each step is performed in correct order to avoid difficulties.
3. Identify, sort and count the parts before assembly.
4. Assemble your furniture on packaging cardboard to prevent scratch or damage.
5. Clean the product with mild cleanser using soft damped cloth. Do not use harsh or abrasive cleanser.
6. Using uncompatible hardware might cause damage to product.

STEP 1

Tighten U-Shape Support (C) to Bottom Panel (B) using Screw/Dowel Nut (1).

Note: Dowel Nuts (1) are inserted from the bottom of Bottom Panel (B) with the nut hole facing outwards to receive Screw (1).

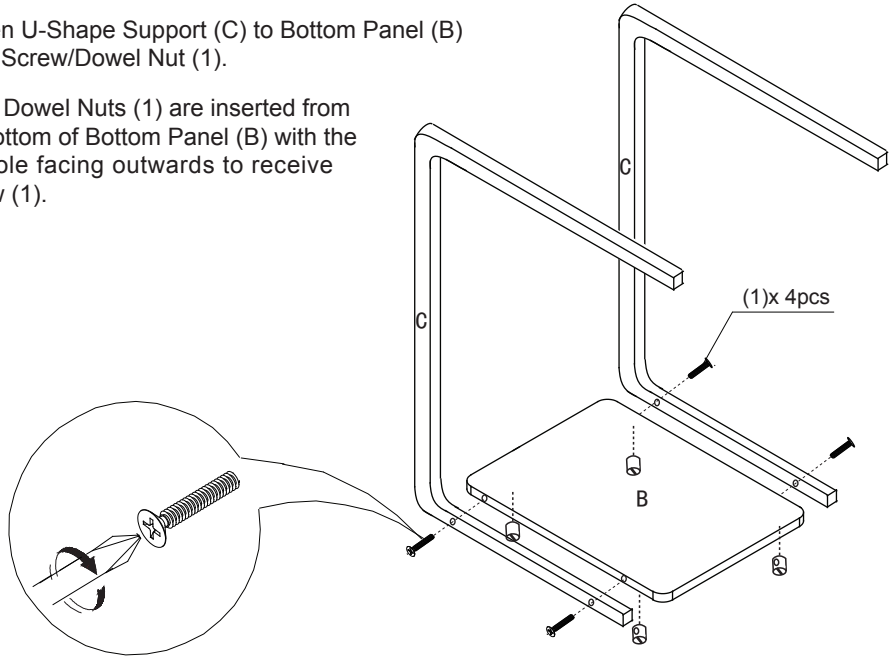

STEP 2

Tighten Top Panel (A) to U-Shape Support (C) using Screw (2).

