STEP 2

Attach Storage Basket (D) and caster (3&4) to the assembled unit, as shown.

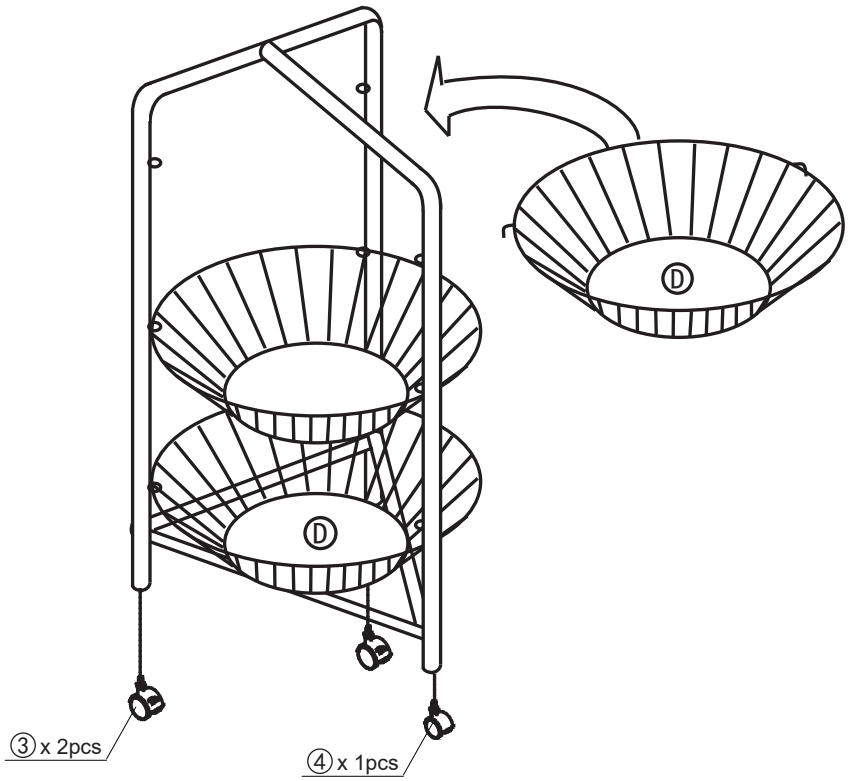

Recommended Maximum Weight

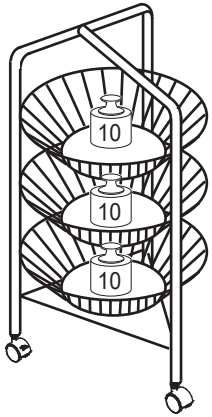

*Unit in Pound(lbs)

WARNING:

>This unit has been designed to support the maximum loads shown. Exceeding these load limits could cause sagging, instability, product collapse, and/or serious injury.

>DO NOT allow children to climb on unit.

>Put heavier items on lower shelves.

Furinno®

Fits Space. Fits Budget

Assembly Instruction

Furinno Balmain 3-tier Fruit Storage Rack

MODEL : **FNBJ-22140**

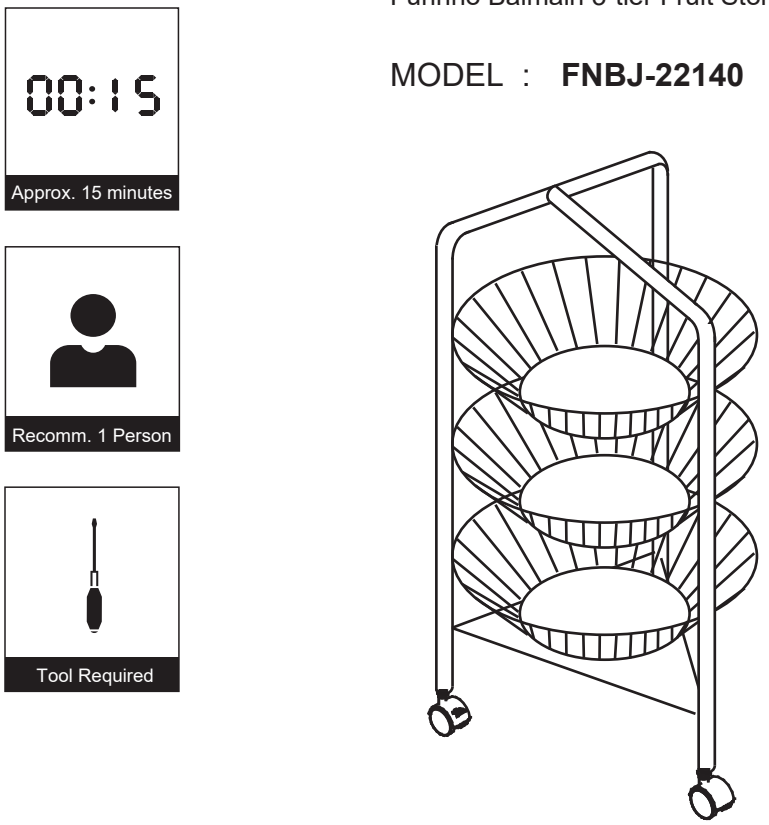

Customer Support

NEED HELP? For replacement requests or product inquiries, please contact our Customer Service Team by emailing us at **support@furinno.com**. Thank you for selecting Furinno!

www.furinno.com

FNBJ-2214020180424

No	Hardware List	Qty
1	Long Screw	1pc
2	Short Screw	3pcs
3	Caster with Brake	2pcs
4	Flat Caster	1pc

No	Parts List	Qty
A	Left Support	1pc
B	Right Support	1pc
C	Triangle Base	1pc
D	Storage Basket	3pcs

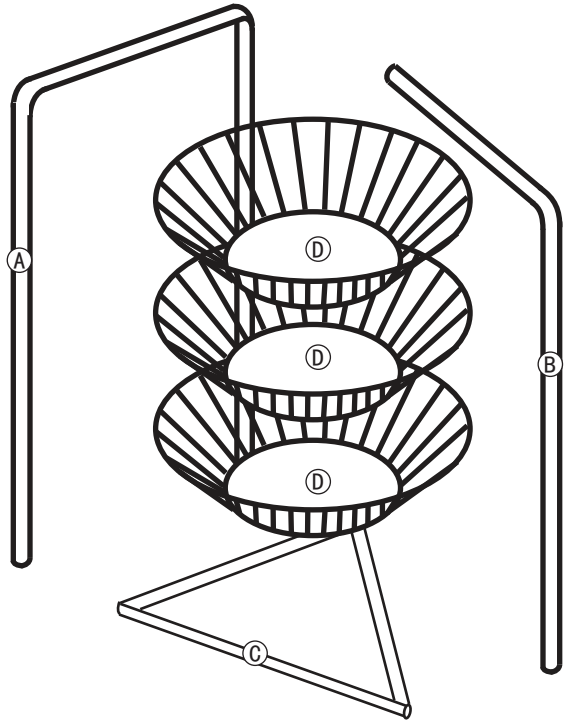

USEFUL HINTS BEFORE YOU START:

1. Read each step carefully before starting.
2. It is important that each step is performed in correct order to avoid difficulties.
3. Identify, sort and count the parts before assembly.
4. Assemble your furniture on packaging cardboard to prevent scratch or damage.
5. Clean the product with mild cleanser using soft damped cloth. Do not use harsh or abrasive cleanser.
6. Using uncompatible hardware might cause damage to product.

STEP 1

Attach Left/Right Support (A&B) with Triangle Base (C) using Long/Short Screw (1&2), as shown.

