STEP 2

2.1 Attach Center Pole (B) to Side Panel (A).
2.2 Attach another Side Panel (A) to the assembled unit using Socket Cap Screw (1), as shown.

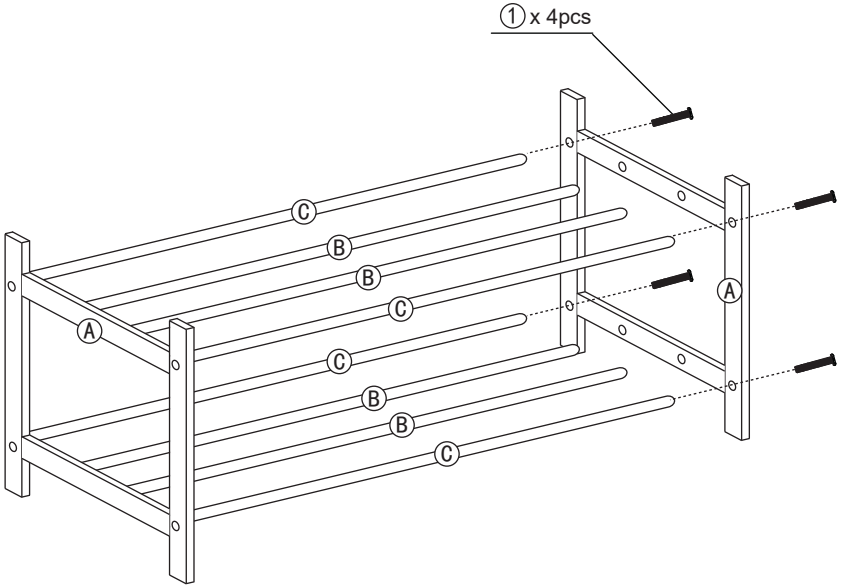

Recommended Maximum Weight

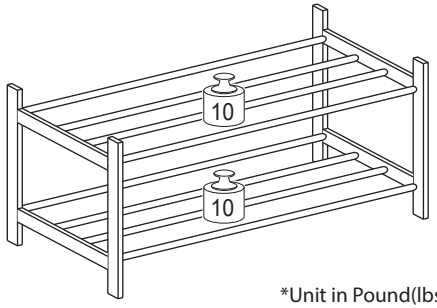

*Unit in Pound(lbs)

WARNING:

>This unit has been designed to support the maximum loads shown. Exceeding these load limits could cause sagging, instability, product collapse, and/or serious injury.

>DO NOT allow children to climb on unit.

>Put heavier items on lower shelves.

Furinno®
Fits Space. Fits Budget

Assembly Instruction

Furinno Pine Solid Wood with Metal Pole Shoe Rack
MODEL : **FNBJ-22153**

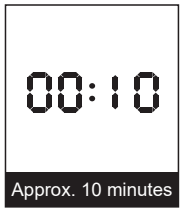

Approx. 10 minutes


Recomm. 1 Person


No Tools Required

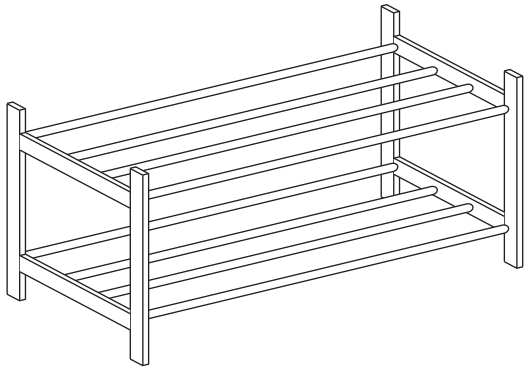

Customer Support

NEED HELP? For replacement requests or product inquiries, please contact our Customer Service Team by emailing us at **support@furinno.com**. Thank you for selecting Furinno!

www.furinno.com

No	Hardware List	Qty
1	Socket Cap Screw	8pcs
2	Allen Wrench	1pc

No	Parts List	Qty
A	Side Panel	2pcs
B	Center Pole	4pcs
C	Side Pole	4pcs

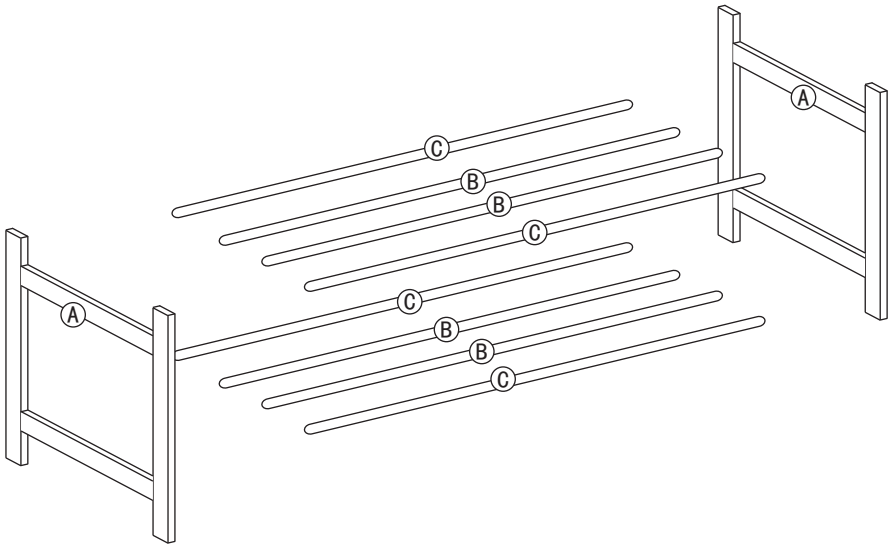

USEFUL HINTS BEFORE YOU START:

1. Read each step carefully before starting.
2. It is important that each step is performed in correct order to avoid difficulties.
3. Identify, sort and count the parts before assembly.
4. Assemble your furniture on packaging cardboard to prevent scratch or damage.
5. Clean the product with mild cleanser using soft damped cloth. Do not use harsh or abrasive cleanser.
6. Using uncompatible hardware might cause damage to product.

STEP 1

Attach Side Pole (C) to Side Panel (A) with Socket Cap Screw (1), as shown.

