STEP 3

Attach both assembled unit in Step 1&2, as shown.

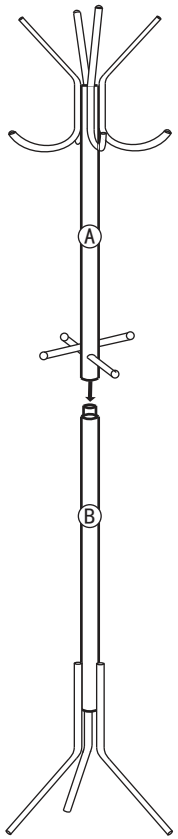

Recommended Maximum Weight

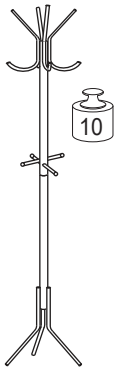

*Unit in Pound(lbs)

WARNING:

>This unit has been designed to support the maximum loads shown. Exceeding these load limits could cause sagging, instability, product collapse, and/or serious injury.

>DO NOT allow children to climb on unit.

Furinno®

Fits Space. Fits Budget

Assembly Instruction

Furinno Yijin Metal Hat and Coat Stand

MODEL : **FNBK-22123**



Approx. 20 minutes



Recomm. 1 Person



Tool Required

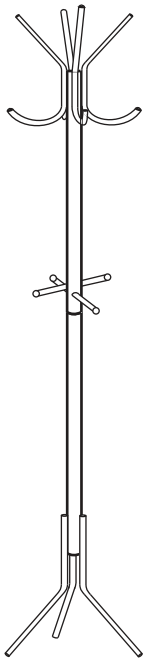

Customer Support

NEED HELP? For replacement requests or product inquiries, please contact our Customer Service Team by emailing us at **support@furinno.com**. Thank you for selecting Furinno!

www.furinno.com

FNBK-2212320180424

No	Hardware List	Qty
1	Long Screw	6pcs
2	Short Screw	8pcs
3	Double-Headed Screw	1pc
4	Big Y-Gasket	6pcs
5	Small Y-Gasket	8pcs

No	Parts List	Qty
A	Upper Pole	1pc
B	Lower Pole	1pc
C	Stand Leg	3pcs
D	Hanger	4pcs
E	Short Pole	2pcs

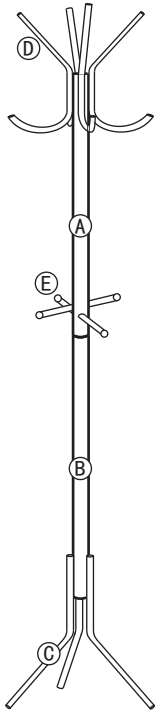

USEFUL HINTS BEFORE YOU START:

1. Read each step carefully before starting.
2. It is important that each step is performed in correct order to avoid difficulties.
3. Identify, sort and count the parts before assembly.
4. Assemble your furniture on packaging cardboard to prevent scratch or damage.
5. Clean the product with mild cleanser using soft damped cloth. Do not use harsh or abrasive cleanser.
6. Using uncompatible hardware might cause damage to product.

STEP 1

Attach Stand Leg (C) to Lower Pole (B) using Long Screw (1) and Big Y-Gasket (4), as shown.

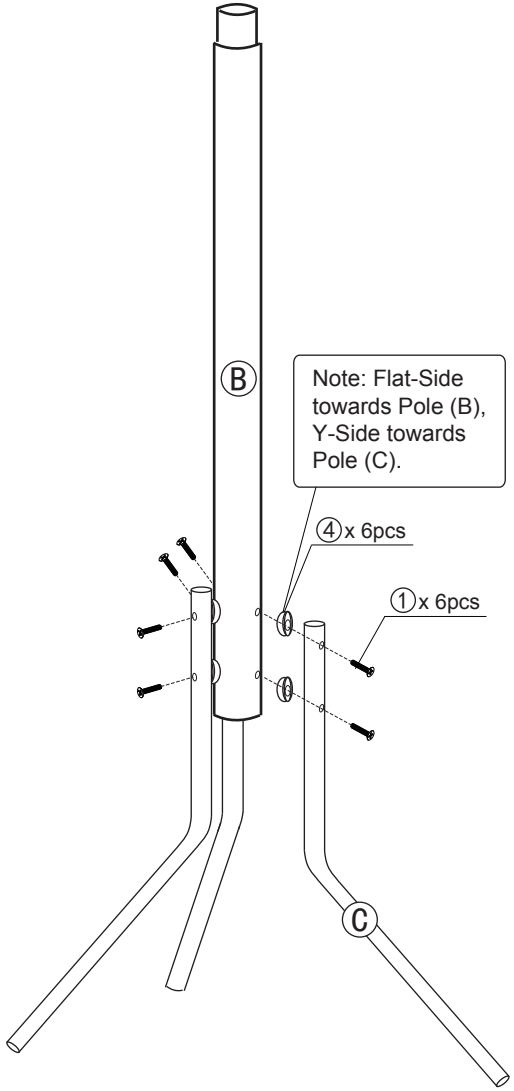

STEP 2

2.1 Attach Hanger (D) to Upper Pole (A) using Short Screw (2) and Small Y-Gasket (5).
2.2 Insert Double-Headed Screw (3) into one of the Short Pole (E).
2.3 Attach both Short Pole (E) to the Upper Pole (A), as shown.

