STEP 3

Connect both assembled unit, as shown.

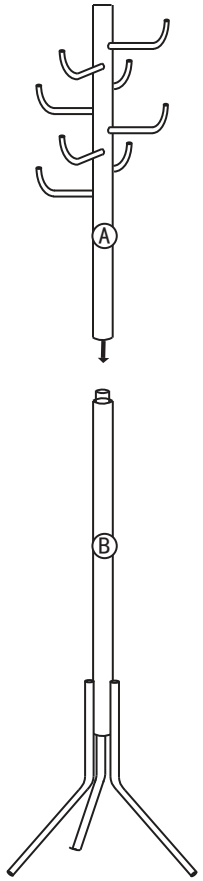

Recommended Maximum Weight

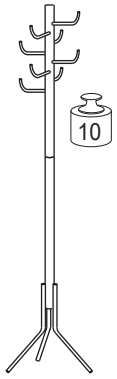

*Unit in Pound(lbs)

WARNING:

>This unit has been designed to support the maximum loads shown. Exceeding these load limits could cause sagging, instability, product collapse, and/or serious injury.

>DO NOT allow children to climb on unit.

>Put heavier items on lower shelves.

Furinno®

Fits Space. Fits Budget

Assembly Instruction

Furinno YiJin Metal Hat And Coat Stand

MODEL : **FNBK-22141**

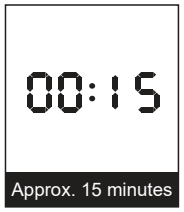





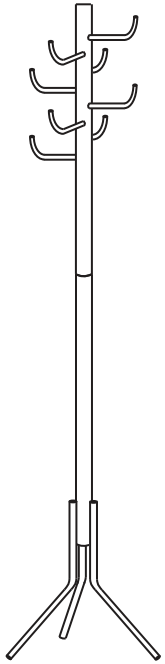

Customer Support

NEED HELP? For replacement requests or product inquiries, please contact our Customer Service Team by emailing us at **support@furinno.com**. Thank you for selecting Furinno!

www.furinno.com

FNBK-2214120180424

No	Hardware List	Qty
1	Long Screw	8pcs
2	Short Screw	6pcs
3	Y-Shaped Gasket	6pcs

No	Parts List	Qty
A	Upper Pole	1pc
B	Lower Pole	1pc
C	Stand Leg	3pcs
D	Hanger	8pcs

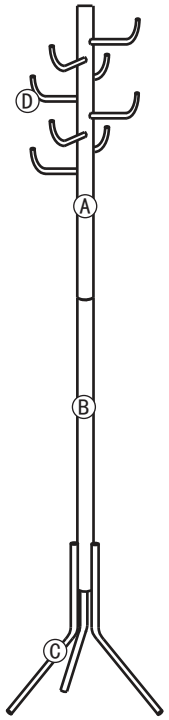

USEFUL HINTS BEFORE YOU START:

1. Read each step carefully before starting.
2. It is important that each step is performed in correct order to avoid difficulties.
3. Identify, sort and count the parts before assembly.
4. Assemble your furniture on packaging cardboard to prevent scratch or damage.
5. Clean the product with mild cleanser using soft damped cloth. Do not use harsh or abrasive cleanser.
6. Using uncompatible hardware might cause damage to product.

STEP 1

Attach Lower Pole (B) with Stand Leg (C) using Short Screw (2) and Y-Shaped Gasket (3).

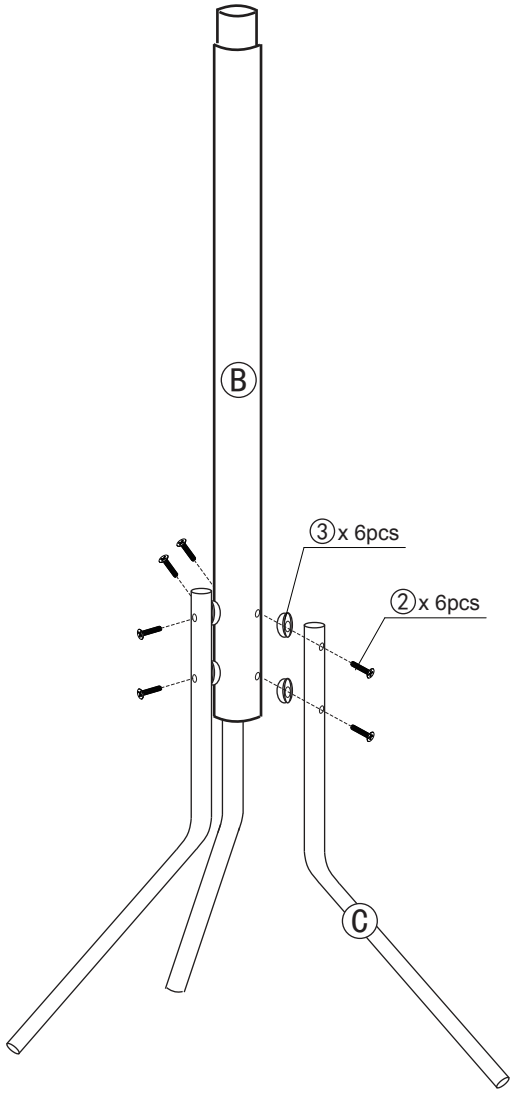

STEP 2

Install Hanger (D) to Upper Pole (A) using Long Screw (1), as shown.

