STEP 3

Connect Upper Pole (1), T-Connector (10), Short Pole (4), Stopper (8) and Upper Adjustable Pole (2), as shown.

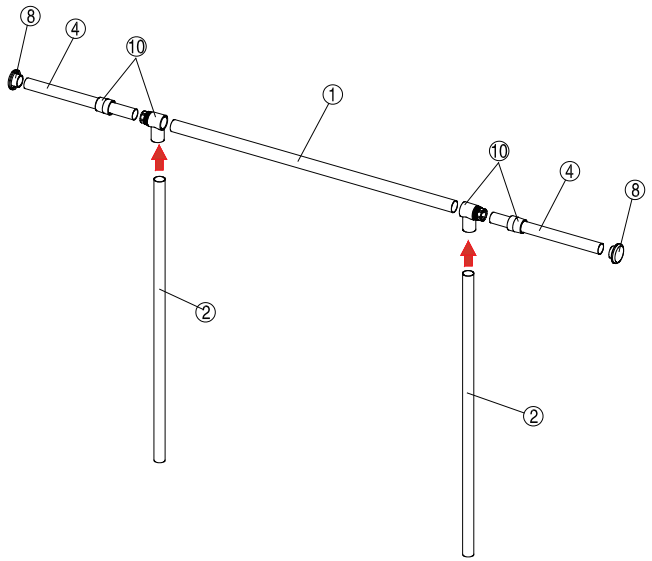

STEP 4

Connect both completed units in Step 1 and Step 2. Adjust unit height with Connector (6).

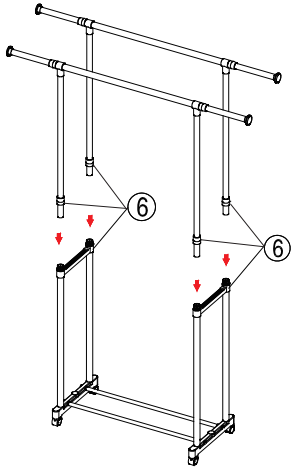

Recommended Maximum Weight

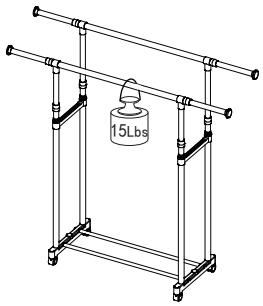

WARNING:

>This unit has been designed to support the maximum loads shown. Exceeding these load limits could cause sagging, instability, product collapse, and/or serious injury.

>DO NOT allow children to climb on unit.

>Put heavier items on lower shelves.

Furinno®
Fits Space. Fits Budget

Assembly Instruction

Furinno Yijin Heavy Duty Dual Level Retractable Rolling Drying Rack

MODEL : **FNBK-22316**

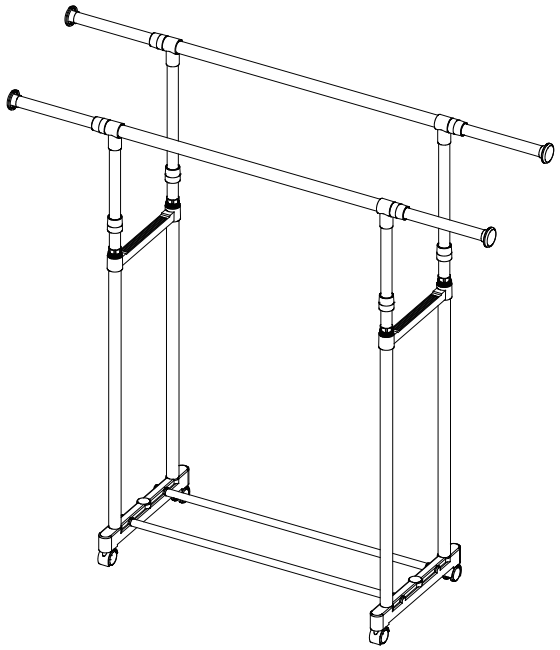

Customer Support

NEED HELP? For replacement requests or product inquiries, please contact our Customer Service Team by emailing us at **support@furinno.com**. Thank you for selecting Furinno!

www.furinno.com

FNBK2231620180725

No	Hardware List	Qty
1	Upper Pole	2pcs
2	Upper Adjustable Pole	4pcs
3	Lower Adjustable Pole	4pcs
4	Short Pole	4pcs
5	Lower Pole	2pcs
6	Connector	2pcs
7	Bottom Support	2pcs
8	Stopper	4pcs
9	Wheel	4pcs
10	T-Connector	4pcs

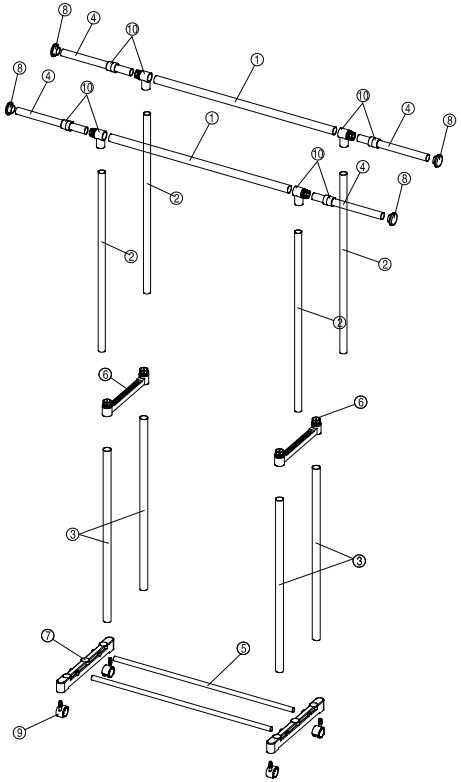

USEFUL HINTS BEFORE YOU START:

1. Read each step carefully before starting.
2. It is important that each step is performed in correct order to avoid difficulties.
3. Identify, sort and count the parts before assembly.
4. Assemble your furniture on packaging cardboard to prevent scratch or damage.
5. Clean the product with mild cleanser using soft damped cloth. Do not use harsh or abrasive cleanser.
6. Using uncompatible hardware might cause damage to product.

STEP 1

Connect Lower Pole (5) with Bottom Support (7) and attach with Wheel (9), as shown.

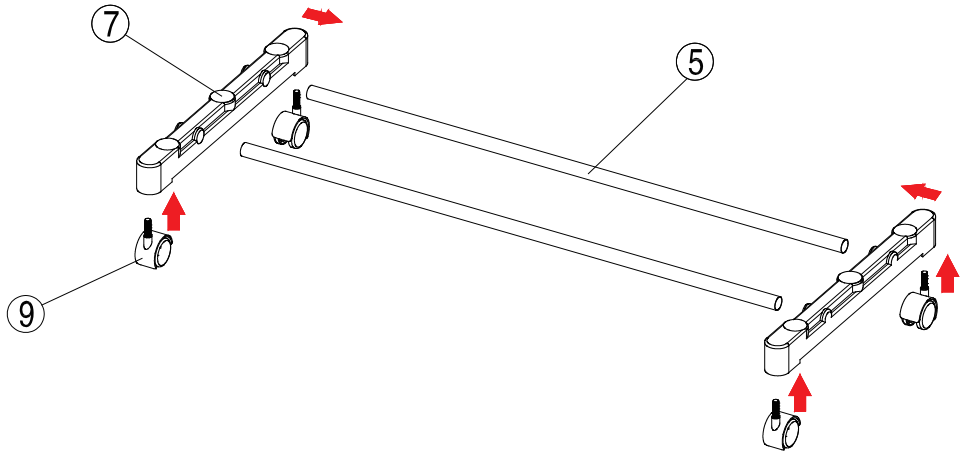

STEP 2

Connect Lower Adjustable Pole (3), Connector (6) with completed unit in Step 1.

