STEP 5

Insert Keyboard Panel (E) to the finished product from Step 2.

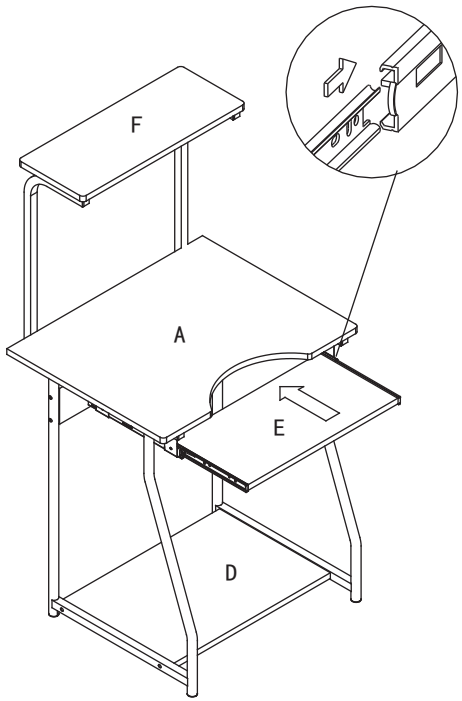

STEP 6

Screw in the Adjustable Leg (4). If the floor surface is not even, adjust the legs to fit.

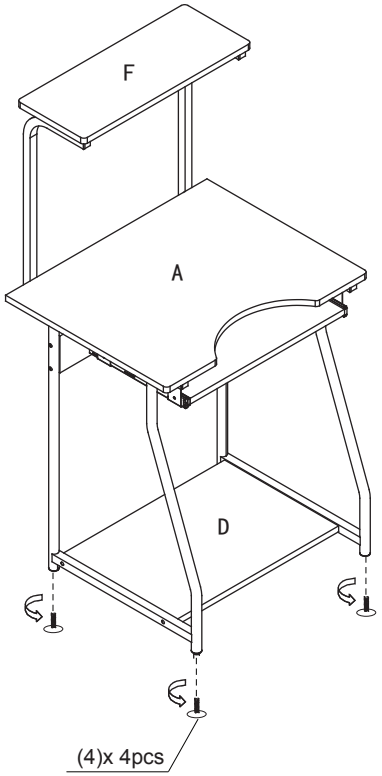

Recommended Maximum Weight

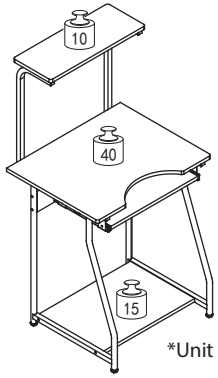

*Unit in Pound(lbs)

WARNING:

>This unit has been designed to support the maximum loads shown. Exceeding these load limits could cause sagging, instability, product collapse, and/or serious injury.

>DO NOT allow children to climb on unit.

>Put heavier items on lower shelves.

Furinno®
Fits Space. Fits Budget

Assembly Instruction

Furinno Besi Double Layers Computer Desk
MODEL : **FNBL-22003**

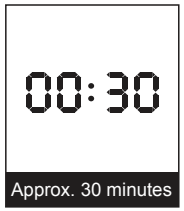

Approx. 30 minutes


Recomm. 2 Person


Tools Required

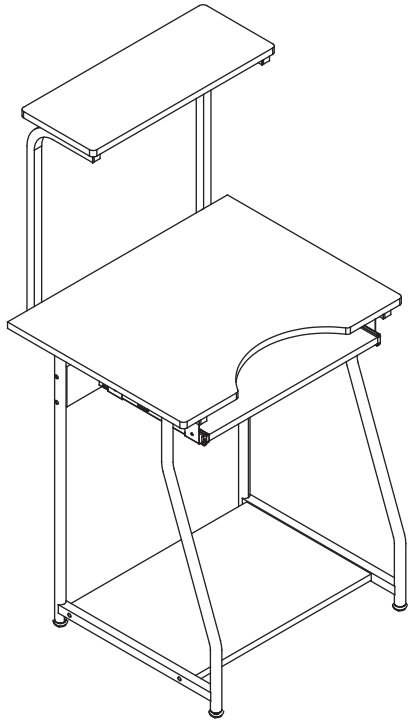

Customer Support

NEED HELP? For replacement requests or product inquiries, please contact our Customer Service Team by emailing us at **support@furinno.com**. Thank you for selecting Furinno!

www.furinno.com

No	Hardware List	Qty
1	Screw	8pcs
2	Screw/ Dowel Nut	8pcs
3	Screw/Nut	4pcs
4	Adjustable Leg	4pcs

No	Parts List	Qty
A	Top Panel	1pc
B	L/R-Support Frame	2pcs
C	Back Panel	1pc
D	Bottom Panel	1pc
E	Keyboard Panel	1pc
F	Uppoer Panel	1pc
G	U-Shaped Support	2pcs

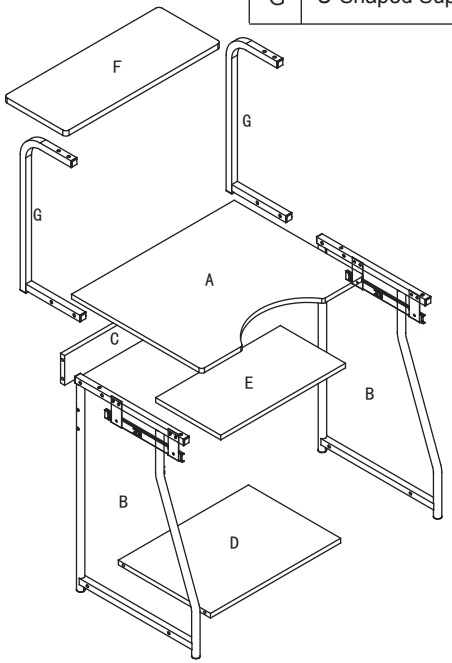

USEFUL HINTS BEFORE YOU START:

1. Read each step carefully before starting.
2. It is important that each step is performed in correct order to avoid difficulties.
3. Identify, sort and count the parts before assembly.
4. Assemble your furniture on packaging cardboard to prevent scratch or damage.
5. Clean the product with mild cleanser using soft damped cloth. Do not use harsh or abrasive cleanser.
6. Using uncompatible hardware might cause damage to product.

STEP 1

Attach Back Panel (C), Bottom Panel (D) to L/R-Support Frame (B) with Screw/Dowel Nut (2).

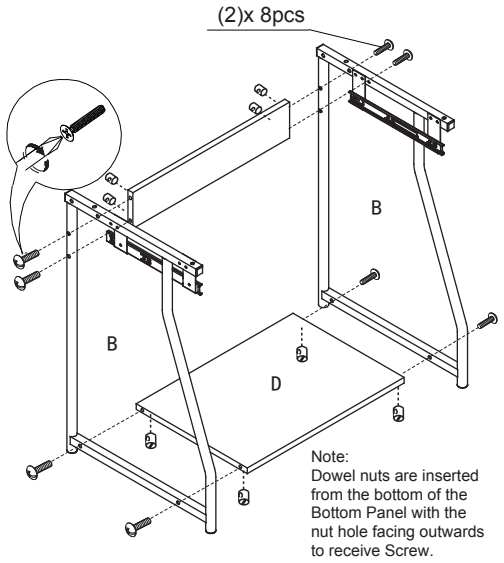

Note:
Dowel nuts are inserted from the bottom of the Bottom Panel with the nut hole facing outwards to receive Screw.

STEP 2

Attach U-Shaped Support (G) to L/R-Support Frame (B) with Screw (3).

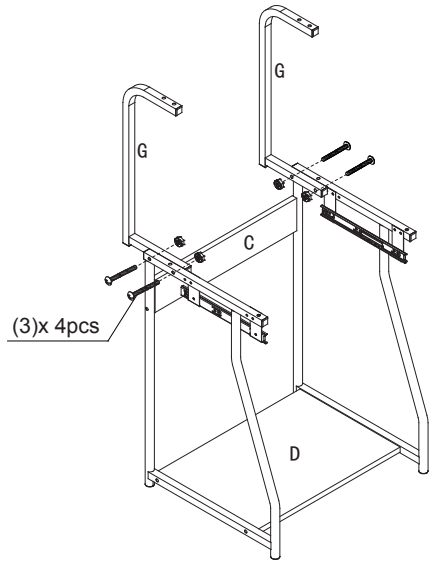

STEP 3

Attach Upper Shelf (F) to U-Shaped Support (G) with Screw (1).

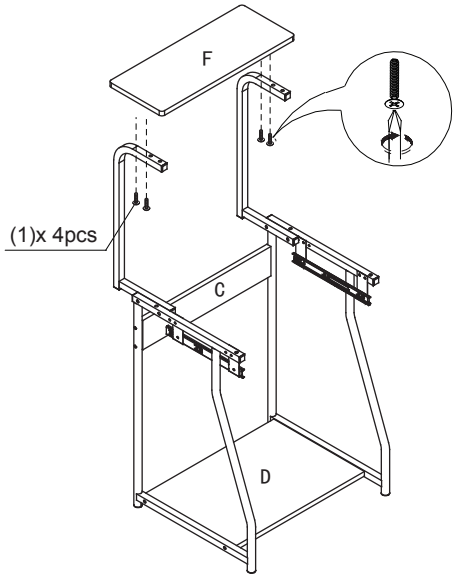

STEP 4

Attach Top Panel (A) to L/R-Support Frame (B) with Screw (1).

