STEP 5

Attach the assembled unit from Step 3 to Top Panel (B) with Long Screw (3), as shown.

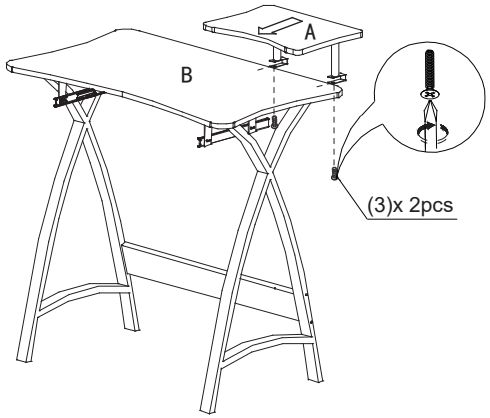

STEP 6

Insert Keyboard Panel (E) along the Rail Tracks.

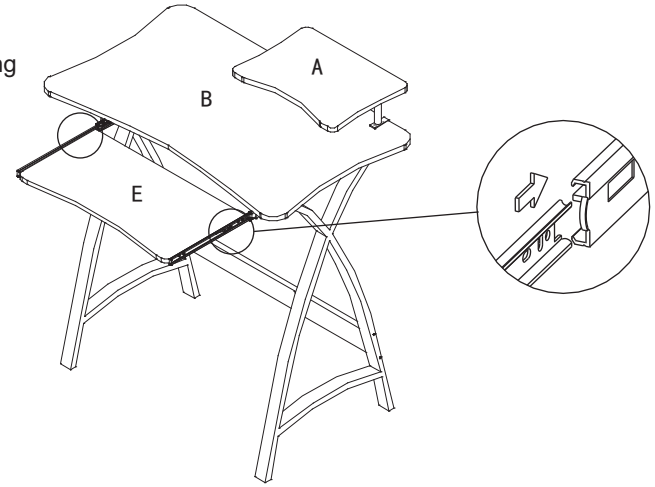

Recommended Maximum Weight

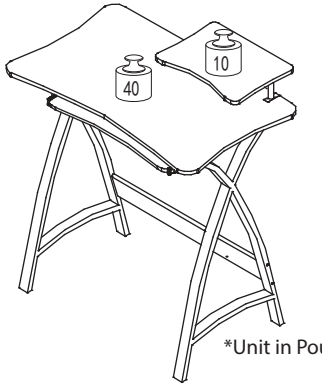

*Unit in Pound(lbs)

WARNING:

>This unit has been designed to support the maximum loads shown. Exceeding these load limits could cause sagging, instability, product collapse, and/or serious injury.

>DO NOT allow children to climb on unit.

>Put heavier items on lower shelves.

Furinno®
Fits Space. Fits Budget

Assembly Instruction

Furinno Besi New Office Computer Desk
MODEL : **FNBL-22005**

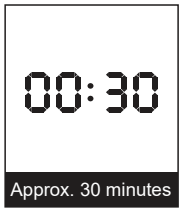

Approx. 30 minutes


Recomm. 1 Person


Tools Required



Customer Support

NEED HELP? For replacement requests or product inquiries, please contact our Customer Service Team by emailing us at **support@furinno.com**. Thank you for selecting Furinno!

www.furinno.com

FNBL-2200520180424

No	Hardware List	Qty
1	Short Screw	4pcs
2	Medium Screw	8pcs
3	Long Screw	2pcs
4	Screw/ Dowel Nut	4pcs
5	Upper Shelf Support	2pcs
6	R-Rail Track	1pc
7	L-Rail Track	1pc

No	Parts List	Qty
A	Upper Shelf	1pc
B	Top Panel	1pc
C	L/R-Support Frame	2pcs
D	Back Panel	1pc
E	Keyboard Panel	1pc

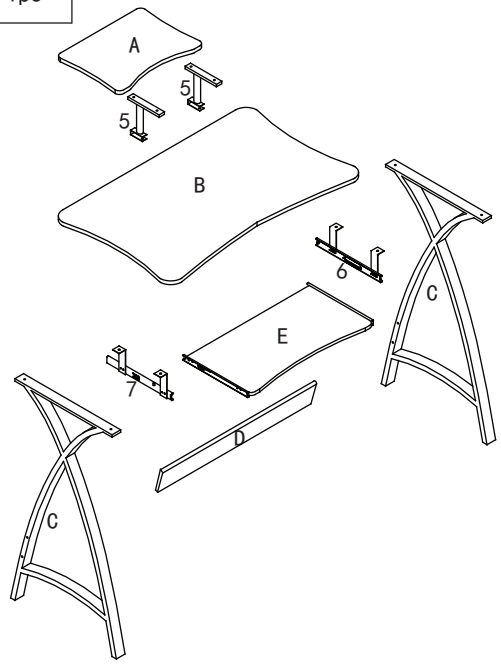

USEFUL HINTS BEFORE YOU START:

1. Read each step carefully before starting.
2. It is important that each step is performed in correct order to avoid difficulties.
3. Identify, sort and count the parts before assembly.
4. Assemble your furniture on packaging cardboard to prevent scratch or damage.
5. Clean the product with mild cleanser using soft damped cloth. Do not use harsh or abrasive cleanser.
6. Using uncompatible hardware might cause damage to product.

STEP 1

Attach L/R-Support Frame (C) to Top Panel (B) with Medium Screw (2).

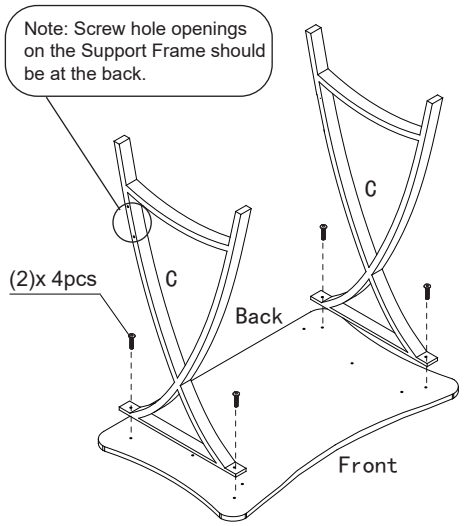

STEP 2

Fix Back Panel (D) to L/R-Support Frame (C) with Screw/Dowel Nut (4).
*Note: Place the Dowel Nut Hole towards Screw Holes to Receive Screws.

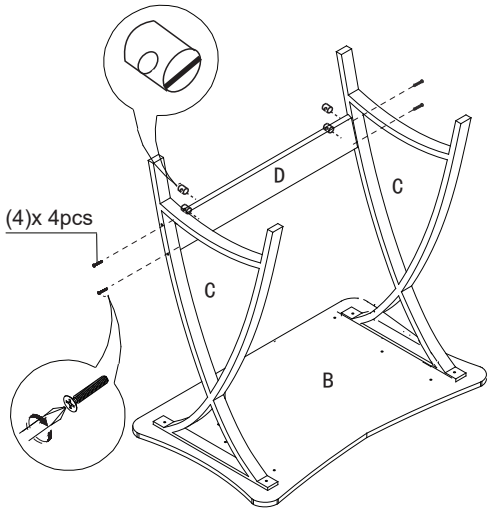

STEP 3

Install L/R-Rail Tracks (6) & (7) to Top Panel (B) by screwing Short Screw (1) to the corresponding holes, as shown.

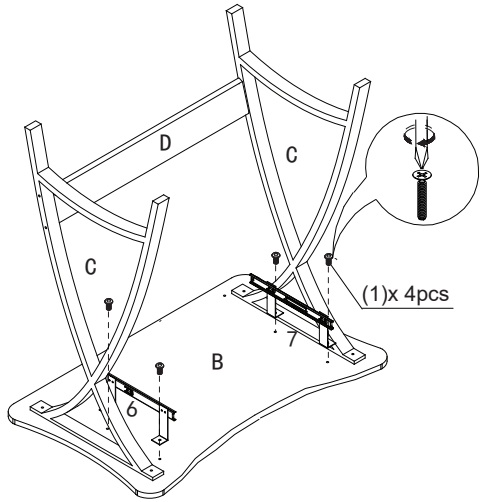

STEP 4

Attach Upper Shelf Support (5) to Top Panel (A) with Middle Screw (2) to the corresponding holes, as shown.

