STEP 2

Attach L/R-Support (A) to Shelf Panels (B) and tighten with Socket Head Cap Screws (1).

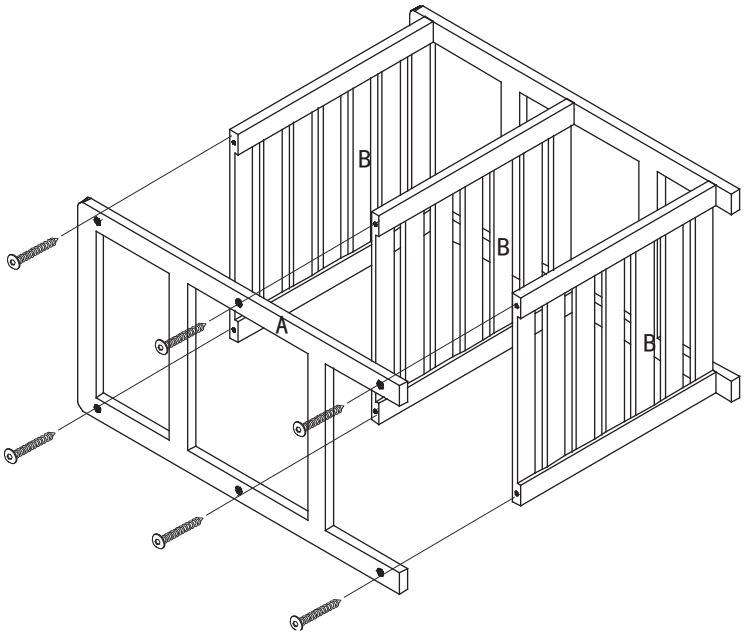

Recommended Maximum Weight

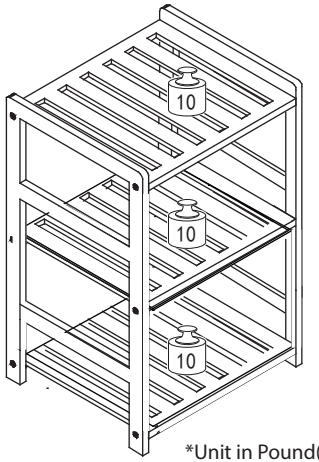

*Unit in Pound(lbs)

WARNING:

>This unit has been designed to support the maximum loads shown. Exceeding these load limits could cause sagging, instability, product collapse, and/or serious injury.

>DO NOT allow children to climb on unit.

>Put heavier items on lower shelves.

Furinno®
Fits Space. Fits Budget

Assembly Instruction

Furinno Pine Solid Wood 3-Tier Storage
MODEL : **FNCJ-33011**

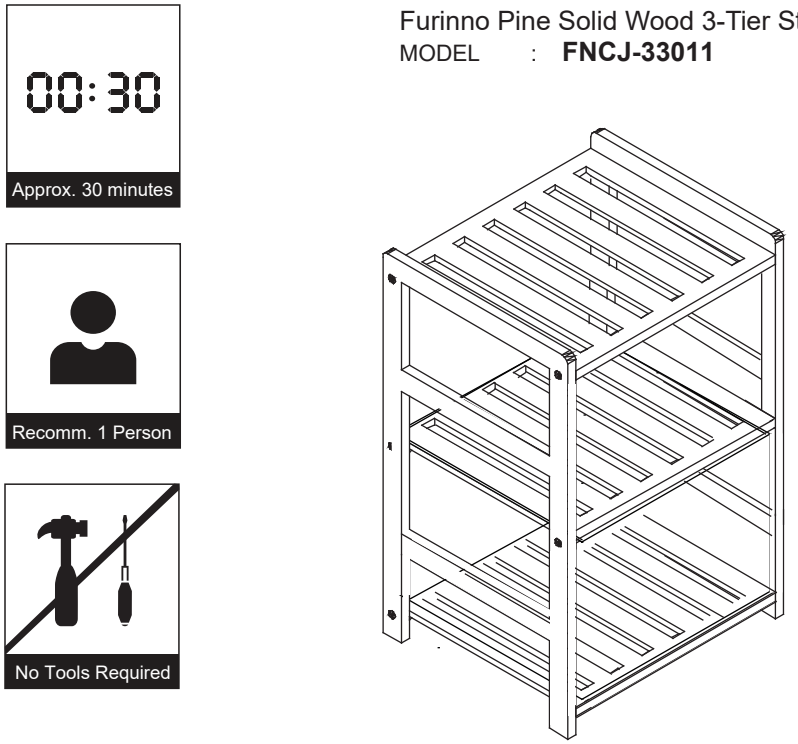

Customer Support

NEED HELP? For replacement requests or product inquiries, please contact our Customer Service Team by emailing us at **support@furinno.com**. Thank you for selecting Furinno!

www.furinno.com

FNCJ-3301120180424

No	Hardware List	Qty
1	Socket Head Cap Screw	12pcs
2	Hex Wrench	1pc

No	Parts List	Qty
A	L/R-Support	2pcs
B	Shelf Panel	3pcs

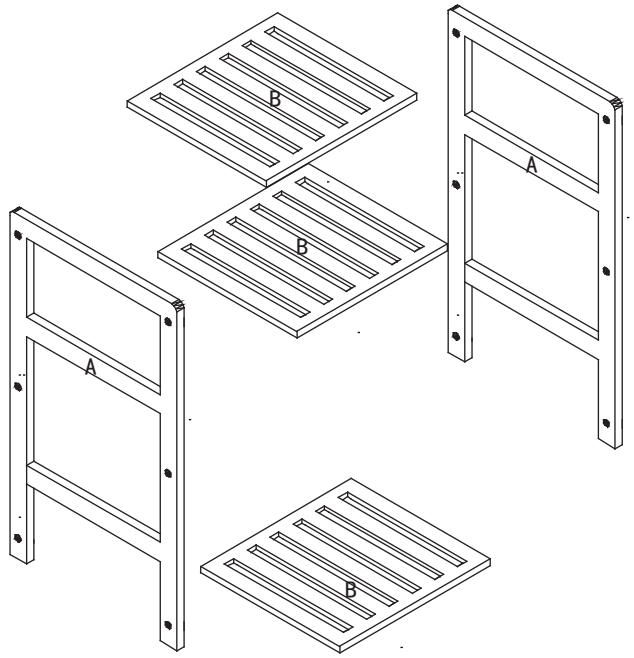

USEFUL HINTS BEFORE YOU START:

1. Read each step carefully before starting.
2. It is important that each step is performed in correct order to avoid difficulties.
3. Identify, sort and count the parts before assembly.
4. Assemble your furniture on packaging cardboard to prevent scratch or damage.
5. Clean the product with mild cleanser using soft damped cloth. Do not use harsh or abrasive cleanser.
6. Using uncompatible hardware might cause damage to product.

STEP 1

Attach L/R-Support (A) to Shelf Panels (B) and tighten with Socket Head Cap Screws (1).

