STEP 3

Through Screw/Washer/Nut①, the back bar Ⓒ is connected with the finished product 2.

Note: Tighten the nuts with pliers.

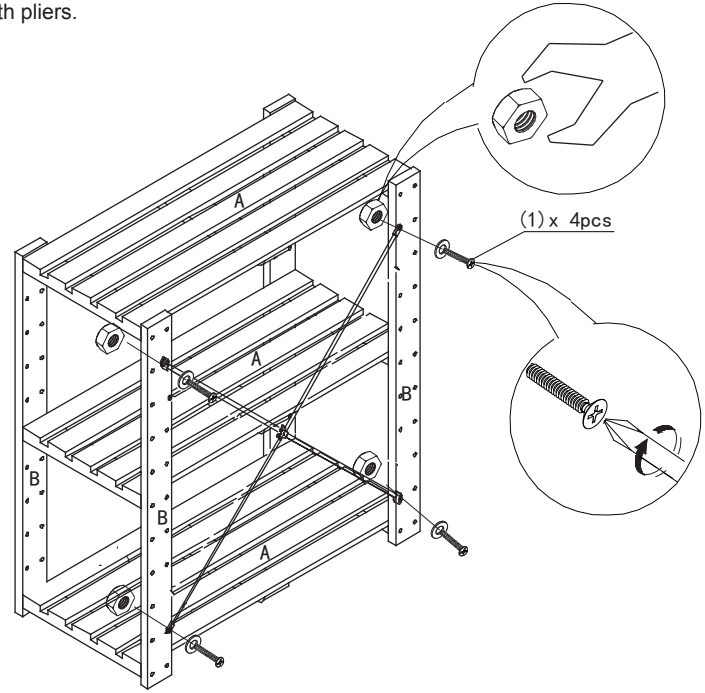

Recommended Maximum Weight

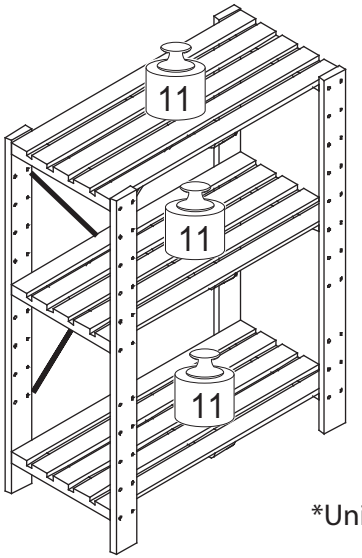

*Unit in Pound(lb)

WARNING:

>This unit has been designed to support the maximum loads shown. Exceeding these load limits could cause sagging, instability, product collapse, and/or serious injury.

>DO NOT allow children to climb on unit.

>Put heavier items on lower shelves.

Furinno®
Fits Space. Fits Budget

Assembly Instruction

Furinno Pine 3-Tier Shelf
MODEL : **FNCJ-33013**

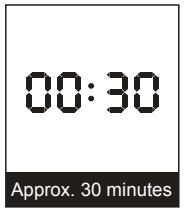

Approx. 30 minutes


Recomm. 2 Person

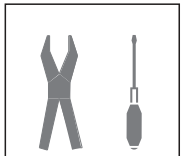
Tools Required

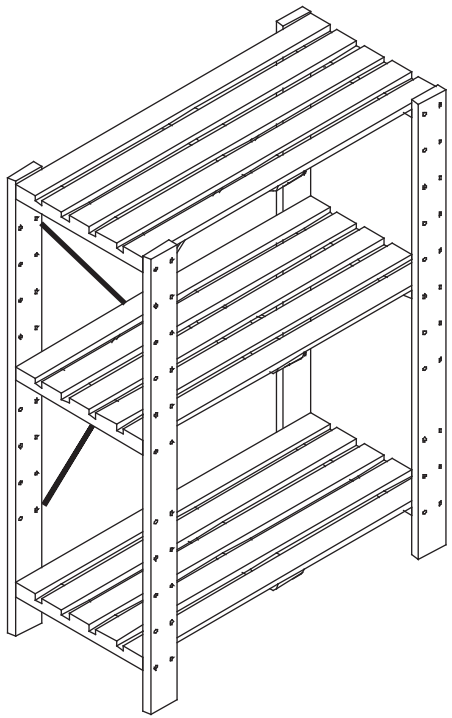

Customer Support

NEED HELP? For replacement requests or product inquiries, please contact our Customer Service Team by emailing us at **support@furinno.com**. Thank you for selecting Furinno!

www.furinno.com

FNCJ-3301320181105

No	Hardware List	Qty
①	Screw/Washer/Nut	4
②	Hexagonal Screw	24
③	Allen Wrench	1

No	Parts List	Qty
Ⓐ	Shelf Panel	3
Ⓑ	Support Leg	4
Ⓒ	Back Bar	1

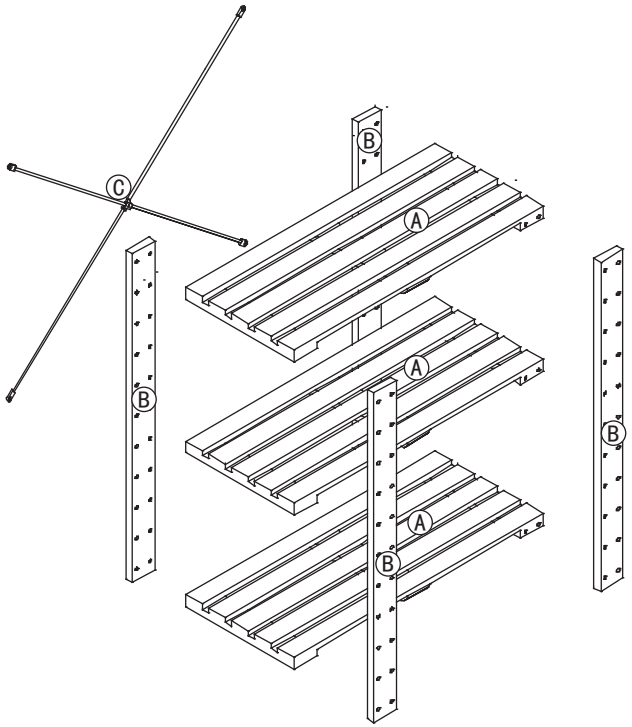

USEFUL HINTS BEFORE YOU START:

1. Read each step carefully before starting.
2. It is important that each step is performed in correct order to avoid difficulties.
3. Identify, sort and count the parts before assembly.
4. Assemble your furniture on packaging cardboard to prevent scratch or damage.
5. Clean the product with mild cleanser using soft damped cloth. Do not use harsh or abrasive cleanser.
6. Using uncompatible hardware might cause damage to product.

STEP 1

Connect the Shelf Panel Ⓐ to the supporting leg Ⓑ by using Hexagonal Screws ②.

Note: The anti skid pad on the Supporting Leg (B) should be facing down.

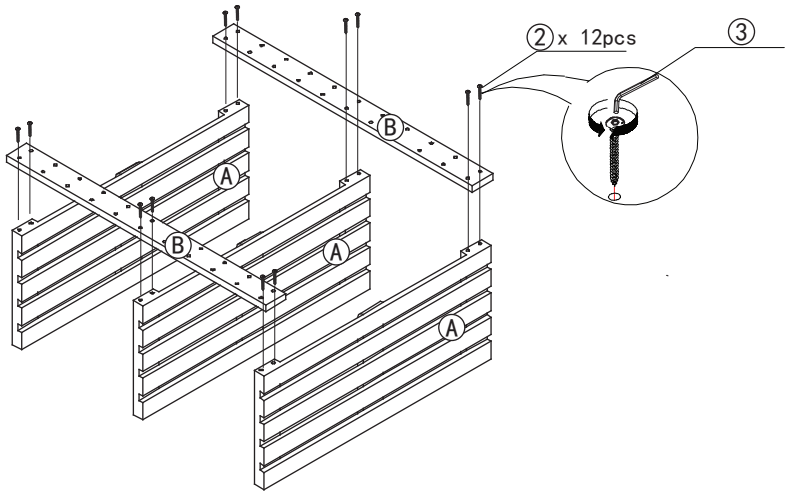

STEP 2

Connect the finished product 1 to the supporting leg Ⓑ by using Hexagonal Screws ②.

Note: The anti skid pad on the Supporting Leg (B) should be facing down.

