STEP 2

Attach Top Panel (A) to the finished product from STEP 1 with Screw/Washer/Nut (1).
Note: Hold nut with spanner (4) while screw in the screws.

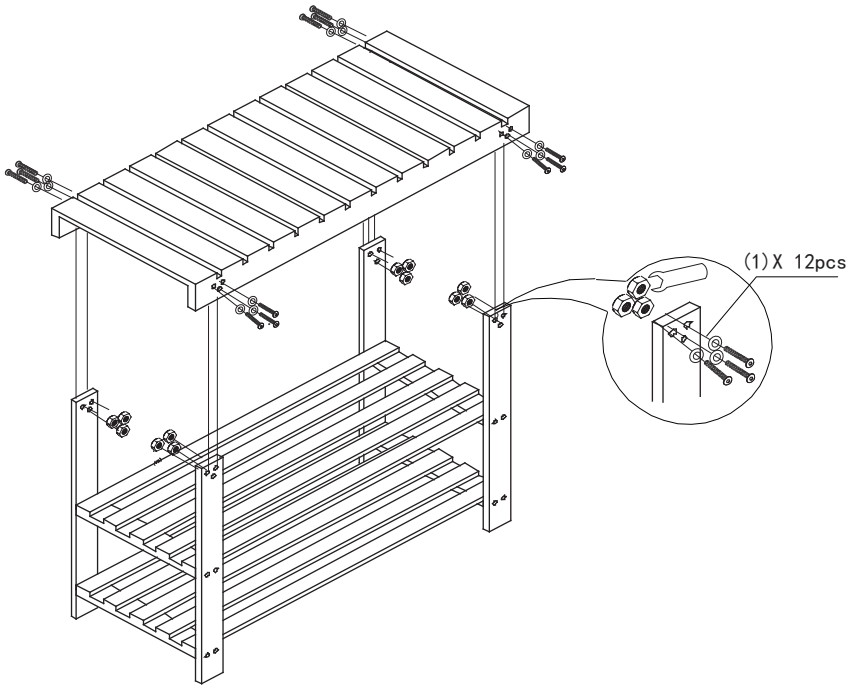

Recommended Maximum Weight

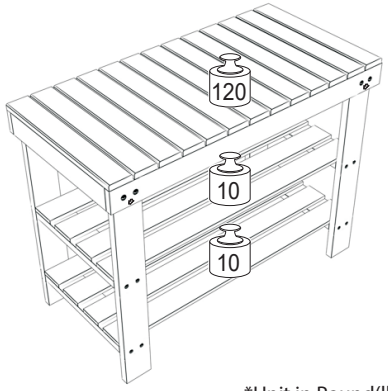

*Unit in Pound(lbs)

WARNING:

>This unit has been designed to support the maximum loads shown. Exceeding these load limits could cause sagging, instability, product collapse, and/or serious injury.

>DO NOT allow children to climb on unit.

>Put heavier items on lower shelves.

Furinno®
Fits Space. Fits Budget

Assembly Instruction

Furinno Pine Wood Shoe Rack Bench
MODEL : **FNCJ-33019**

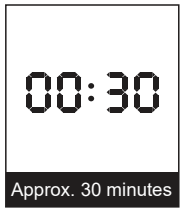

Approx. 30 minutes


Recomm. 1 Person


No tools Required



Customer Support

NEED HELP? For replacement requests or product inquiries, please contact our Customer Service Team by emailing us at **support@furinno.com**. Thank you for selecting Furinno!

www.furinno.com

No	Hardware List	Qty
1	Screw/Washer/Nut	12pcs
2	Socket Head Cap Screw	16pcs
3	Hex Wrench	1pc
4	Spanner	1pc

No	Parts List	Qty
A	Top Panel	1pc
B	Shelf Panel	2pcs
C	Support Leg	4pcs

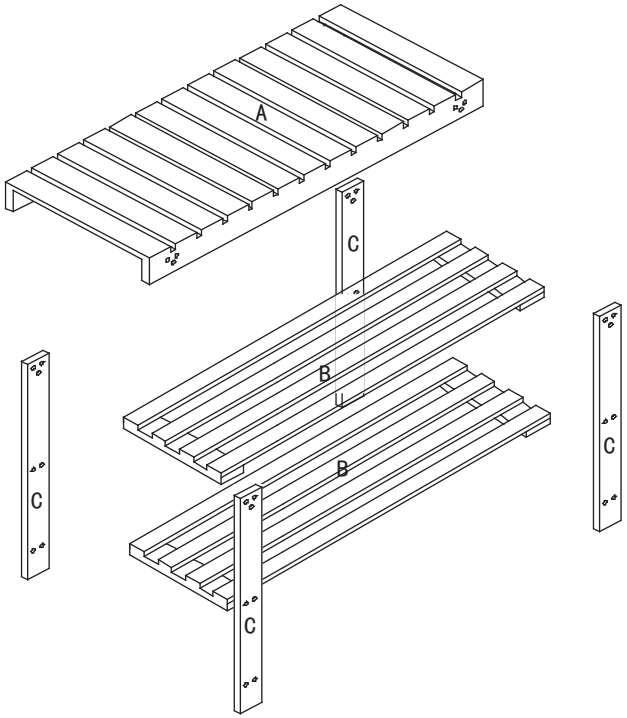

USEFUL HINTS BEFORE YOU START:

1. Read each step carefully before starting.
2. It is important that each step is performed in correct order to avoid difficulties.
3. Identify, sort and count the parts before assembly.
4. Assemble your furniture on packaging cardboard to prevent scratch or damage.
5. Clean the product with mild cleanser using soft damped cloth. Do not use harsh or abrasive cleanser.
6. Using uncompatible hardware might cause damage to product.

STEP 1

Attach Support Leg (C) to Shelf Panels (B) with Socket Head Cap Screw (2).

