Step 5

Gently tap the shelf down to insert the shelf bracket into the hole.

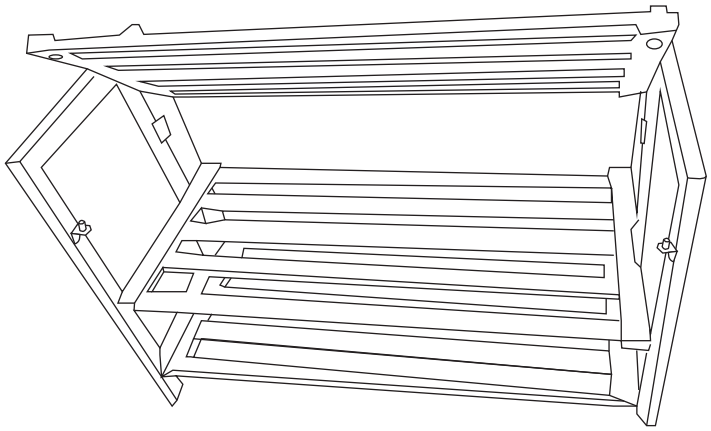

Step 6

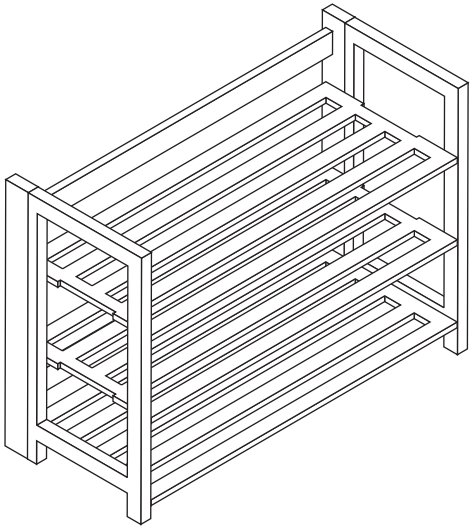

Recommended Maximum Weight

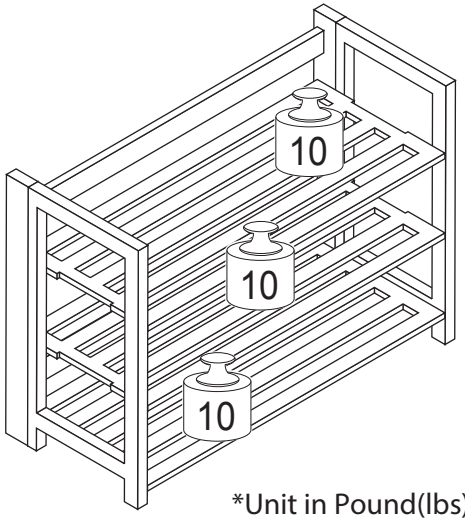

*Unit in Pound(lbs)

Furinno®
Fits Space. Fits Budget

Assembly Instruction

Furinno Foldable 3-Tier Shoe Rack
MODEL : **FNCJ-33044**

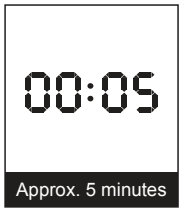





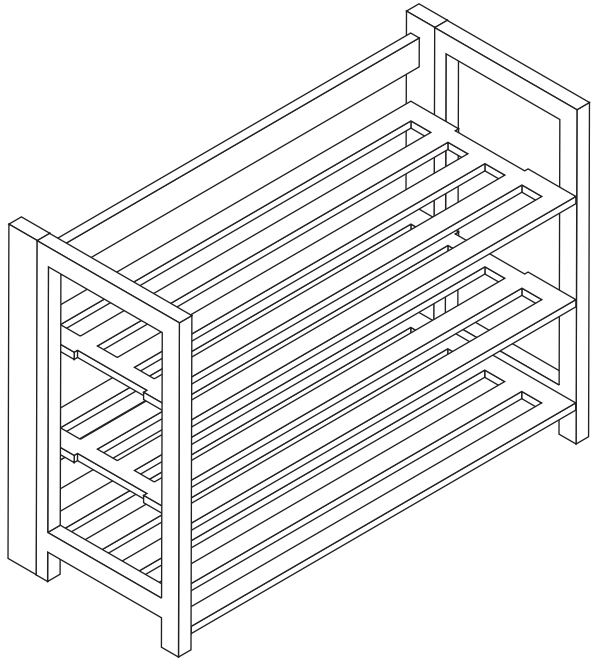

Customer Support

NEED HELP? For replacement requests or product inquiries, please contact our Customer Service Team by emailing us at **support@furinno.com**. Thank you for selecting Furinno!

www.furinno.com

FNCJ-3304420190108

Step 1

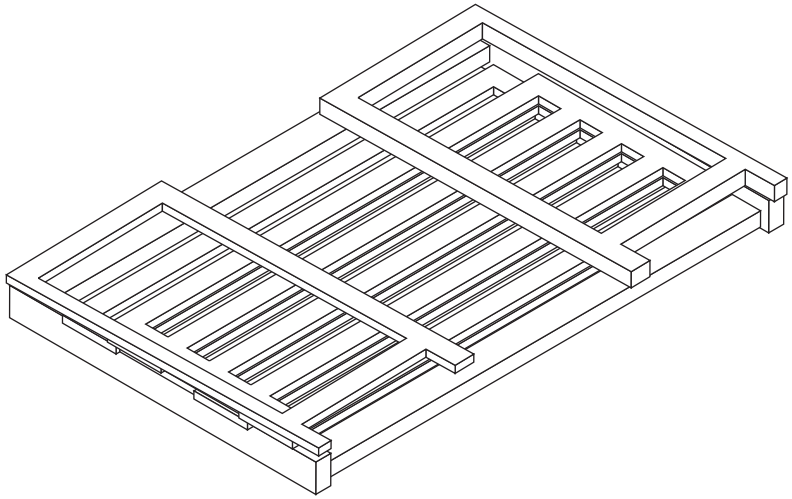

Step 2

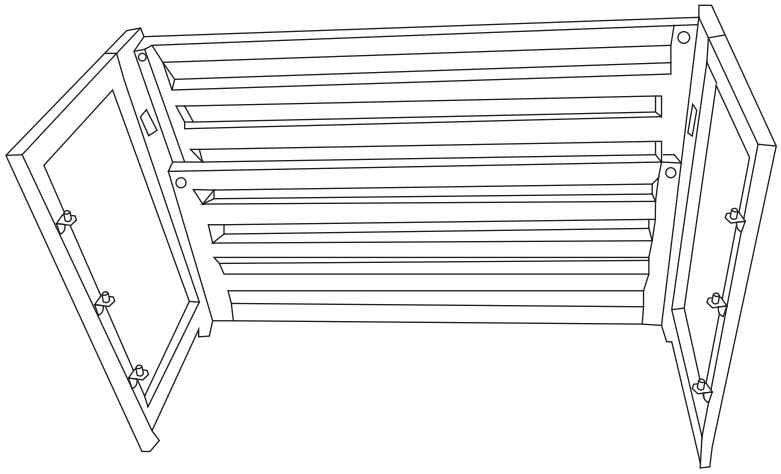

Step 3

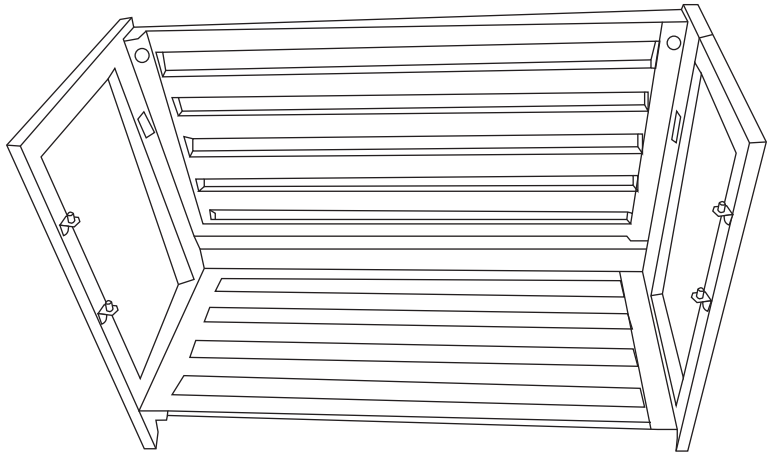

Step 4

