STEP 3

Attach Base Bar (D) to L/R-Side Panel (A) & (F) with Screw (4).

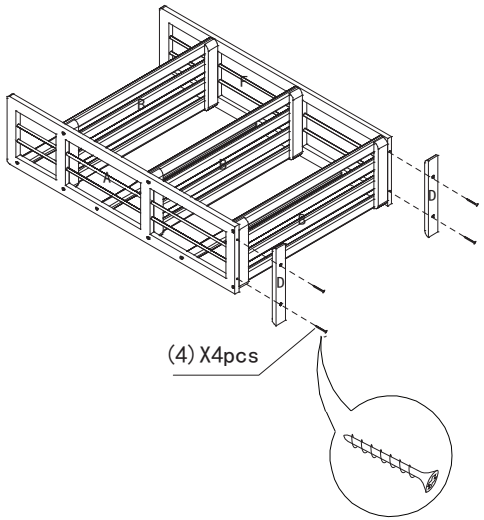

STEP 4

Place Stopper (E) onto each Cross Bar (E).

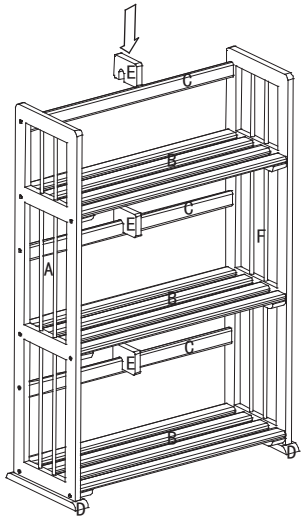

Recommended Maximum Weight

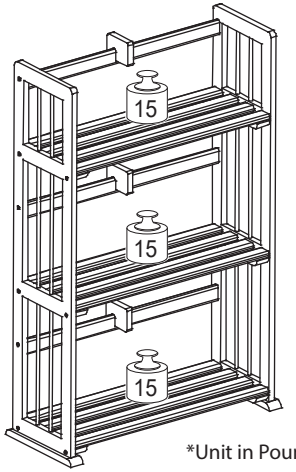

*Unit in Pound(lbs)

WARNING:

>This unit has been designed to support the maximum loads shown. Exceeding these load limits could cause sagging, instability, product collapse, and/or serious injury.

>DO NOT allow children to climb on unit.

>Put heavier items on lower shelves.

Furinno®
Fits Space. Fits Budget

Assembly Instruction

Furinno Pine Solid Wood 3-Tier Bookshelf

MODEL : **FNCL-33001**

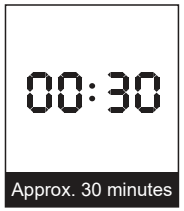





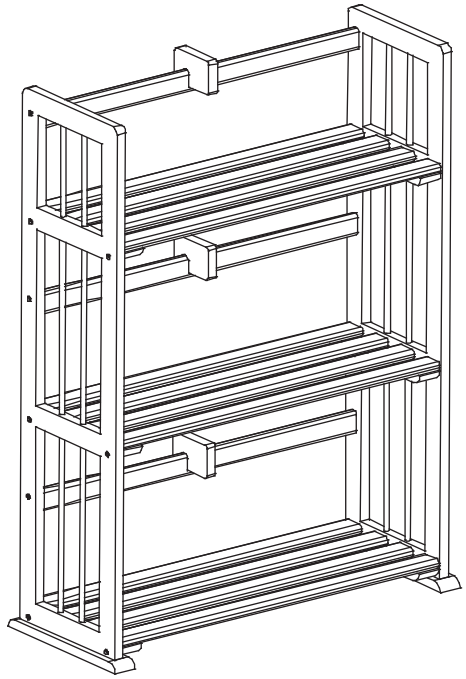

Customer Support

NEED HELP? For replacement requests or product inquiries, please contact our Customer Service Team by emailing us at **support@furinno.com**. Thank you for selecting Furinno!

www.furinno.com

No	Hardware List	Qty
1	Dowel	18pcs
2	Socket Head Cap Screw	12pcs
3	Hex Wrench	1pc
4	Screw	10pcs

No	Parts List	Qty
A	L-Side Panel	1pc
B	Shelf Panel	3pcs
C	Cross Bar	3pcs
D	Base Bar	2pcs
E	Stopper	3pcs
F	R-Side Panel	1pc

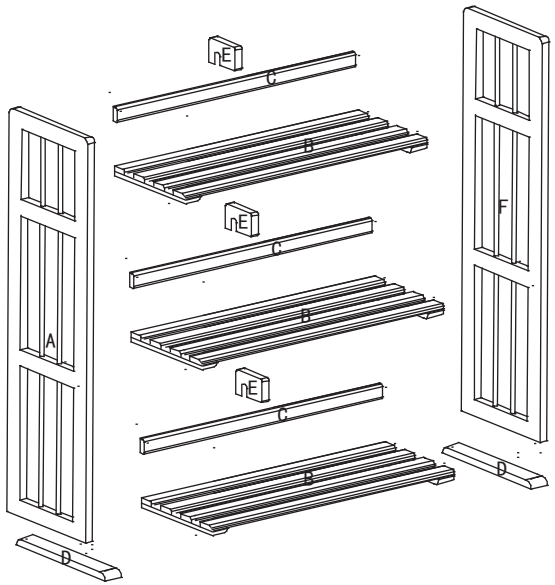

USEFUL HINTS BEFORE YOU START:

1. Read each step carefully before starting.
2. It is important that each step is performed in correct order to avoid difficulties.
3. Identify, sort and count the parts before assembly.
4. Assemble your furniture on packaging cardboard to prevent scratch or damage.
5. Clean the product with mild cleanser using soft damped cloth. Do not use harsh or abrasive cleanser.
6. Using uncompatible hardware might cause damage to product.

STEP 1

1.1 Attach Shelf Panels (B) to L-Side Panel (A) and tighten with Socket Head Cap Screw (2) and Dowel (1).

1.2 Attach Cross Bar (C) to L-Side Panel (A) and tighten with Screw (4) and Dowel (1).

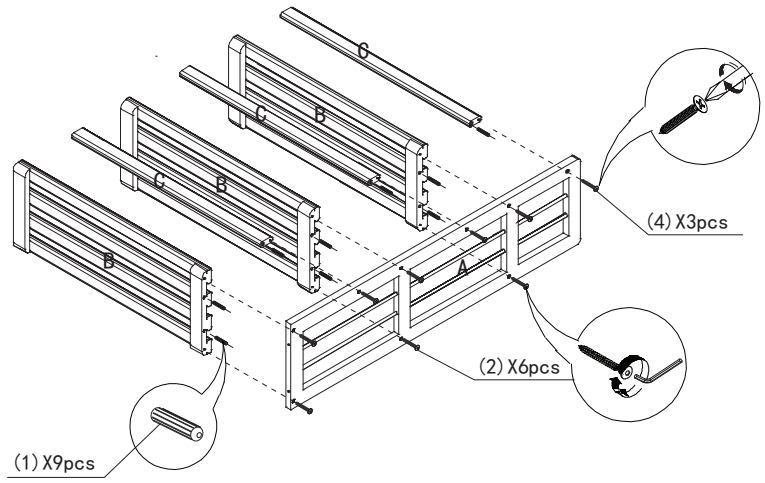

STEP 2

2.1 Attach R-Side Panel (F) to Shelf Panel (B) and tighten with Socket Head Cap Screw (2) and Dowel (1).

2.2 Tighten Cross Bar (C) to R-Side Panel (F) with Screw (4)and Dowel (1).

