Recommended Maximum Weight

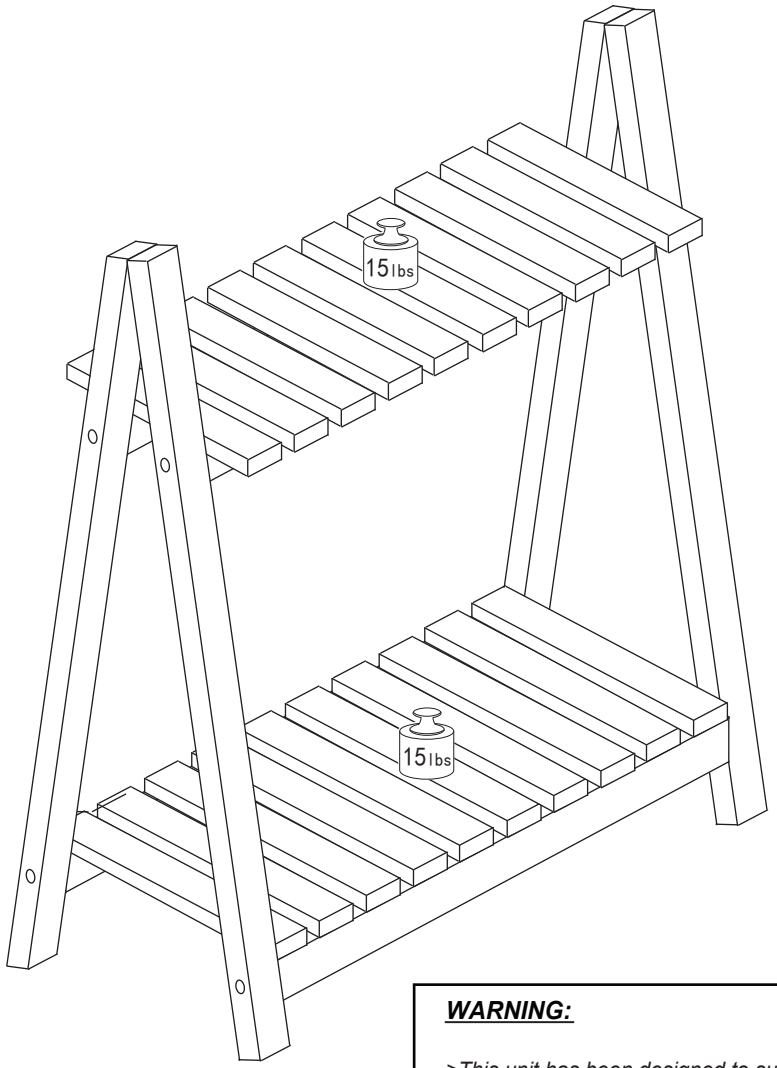

WARNING:

>This unit has been designed to support the maximum loads shown. Exceeding these load limits could cause sagging, instability, product collapse, and/or serious injury.

>DO NOT allow children to climb on unit.

>Put heavier items on lower shelves.

Furinno®
Fits Space. Fits Budget

Assembly Instruction

Furinno Yaotai 2-Tier Solid Pine Wood Outdoor Plant Shelves

MODEL : **FNCP-33036**



Approx. 15 minutes


Recomm. 1 Person


No Tools Required

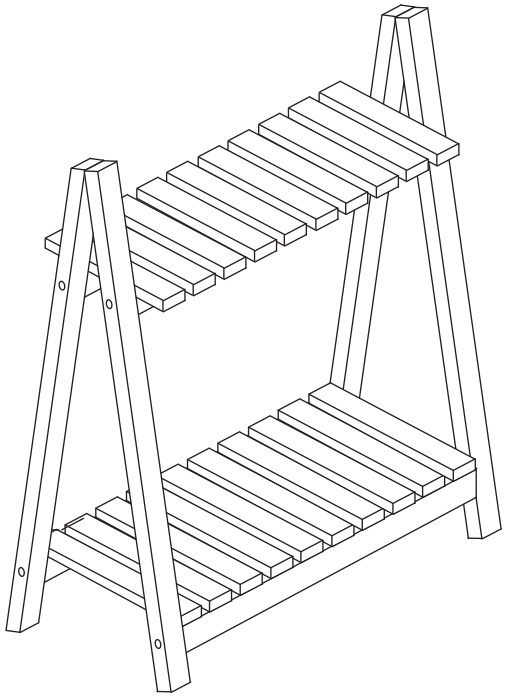

Customer Support

NEED HELP? For replacement requests or product inquiries, please contact our Customer Service Team by emailing us at **support@furinno.com**. Thank you for selecting Furinno!

www.furinno.com

FNCP3303620180424

No	Hardware List	Qty
1	Hexagon Screw	8pcs
2	Allen Wrench	1pc

No	Parts List	Qty
A	Left Support	1pc
B	Right Support	1pc
C	Upper Shelf Panel	1pc
D	Lower Shelf Panel	1pc

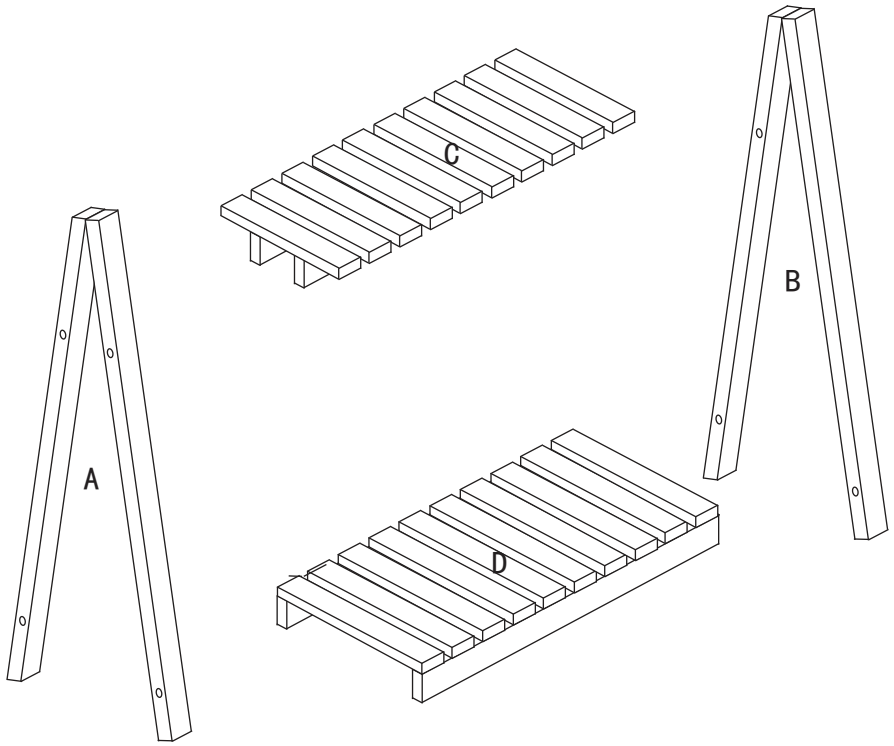

USEFUL HINTS BEFORE YOU START:

1. Read each step carefully before starting.
2. It is important that each step is performed in correct order to avoid difficulties.
3. Identify, sort and count the parts before assembly.
4. Assemble your furniture on packaging cardboard to prevent scratch or damage.
5. Clean the product with mild cleanser using soft damped cloth. Do not use harsh or abrasive cleanser.
6. Using uncompatible hardware might cause damage to product.

STEP 1

1.1 Attach U/L Shelf Panel (C,D) with L/R Support (A,B) using Hexagon Screw (1).
1.2 Tighten Hexagon Screw (1) using Allen Wrench (2).

