STEP 11

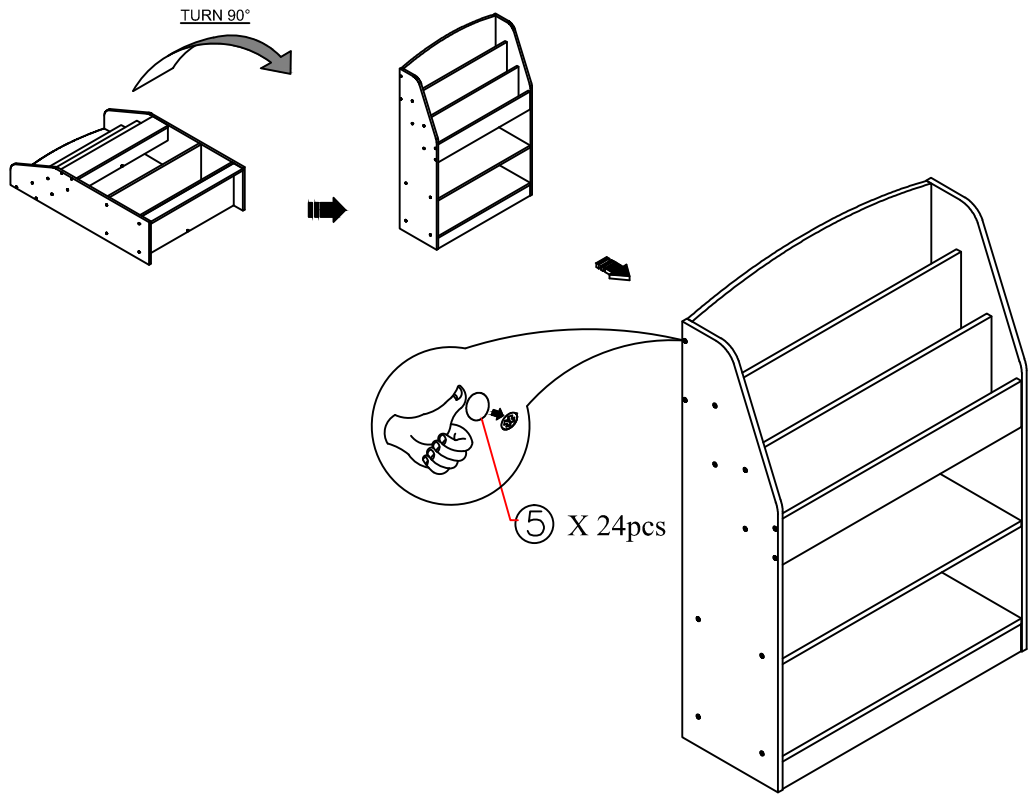

STEP 12

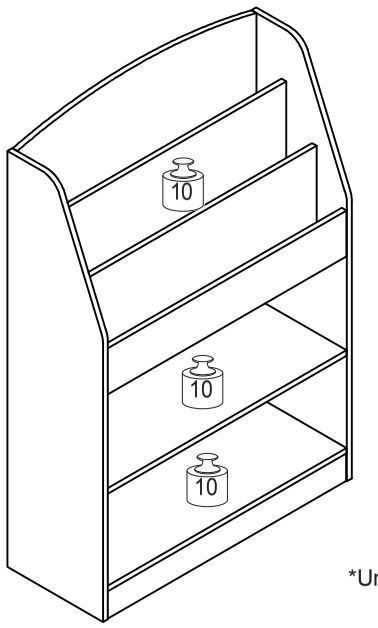

*Unit in Pound(lbs)

WARNING:

>This unit has been designed to support the maximum loads shown. Exceeding these load limits could cause sagging, instability, product collapse, and/or serious injury.

>DO NOT allow children to climb on unit.

>Put heavier items on lower shelves.

Furinno®

Fits Space. Fits Budget

Assembly Instruction

Furinno Magazine/Bookshelf with Toy Storage

MODEL : FR16118



Approx. 30 minutes

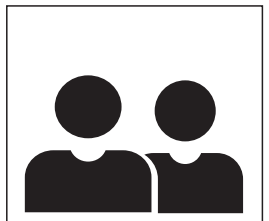

Recomm. 2 Person

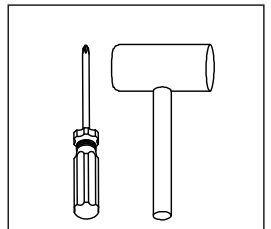

Tool Required

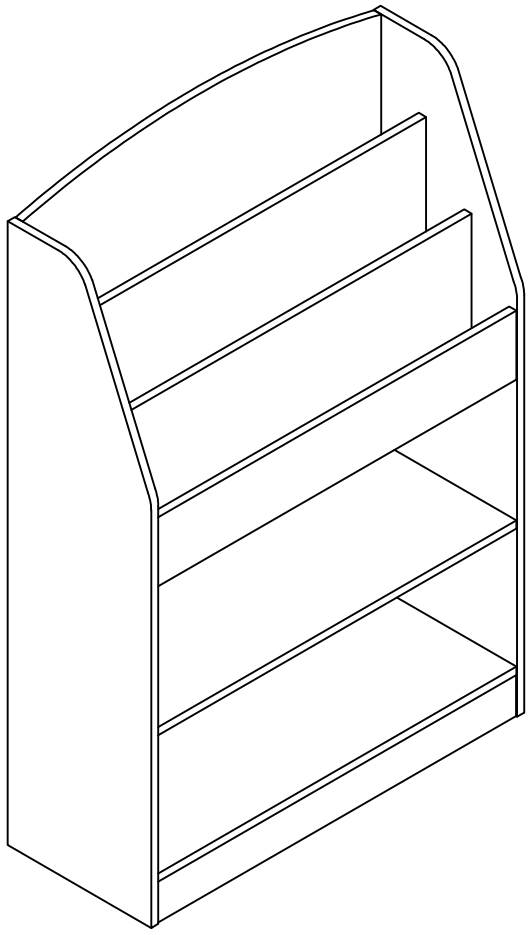

Customer Support

NEED HELP? For replacement requests or product inquiries, please contact our Customer Service Team by emailing us at **support@furinno.com**. Thank you for selecting Furinno!

www.furinno.com

NO	HARDWARE LIST	QTY
1	Long Screw	29pcs
2	Short Screw	4pcs
3	Dowel	20pcs
4	L Bracket	2pcs
5	Stickers	24pcs

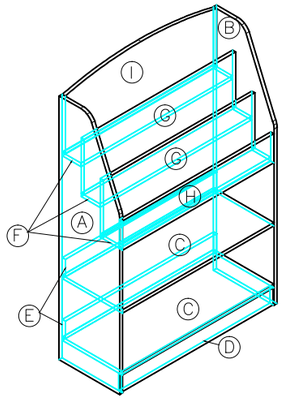

NO	PARTS LIST	QTY
A	LEFT SIDE PANEL	1pc
B	RIGHT SIDE PANEL	1pc
C	LARGE SHELF PANEL	2pcs
D	FRONT SUPPORT PANEL	1pc
E	BACK SUPPORT PANEL	2pcs
F	SMALL SHELF PANEL	3pcs
G	LARGE DIVIDER PANEL	2pcs
H	SMALL DIVIDER PANEL	1pc
I	BACK PANEL	1pc

USEFUL HINTS BEFORE YOU START:

1. Read each step carefully before starting.
2. It is important that each step is performed in correct order to avoid difficulties.
3. Identify, sort and count the parts before assembly.
4. Assemble your furniture on packaging cardboard to prevent scratch or damage.
5. Clean the product with mild cleanser using soft damped cloth. Do not use harsh or abrasive cleanser.
6. Using uncompatible hardware might cause damage to product.

STEP 1

ASSEMBLY INSTRUCTION

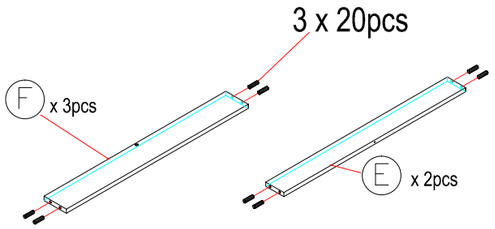

STEP 2

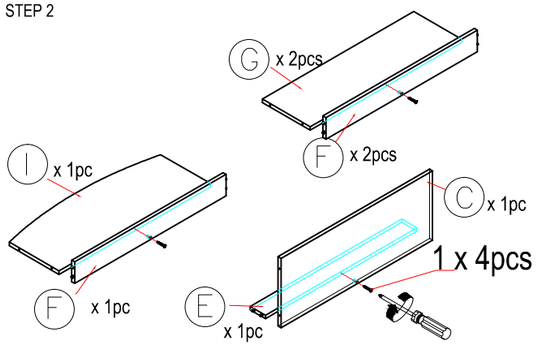

STEP 3

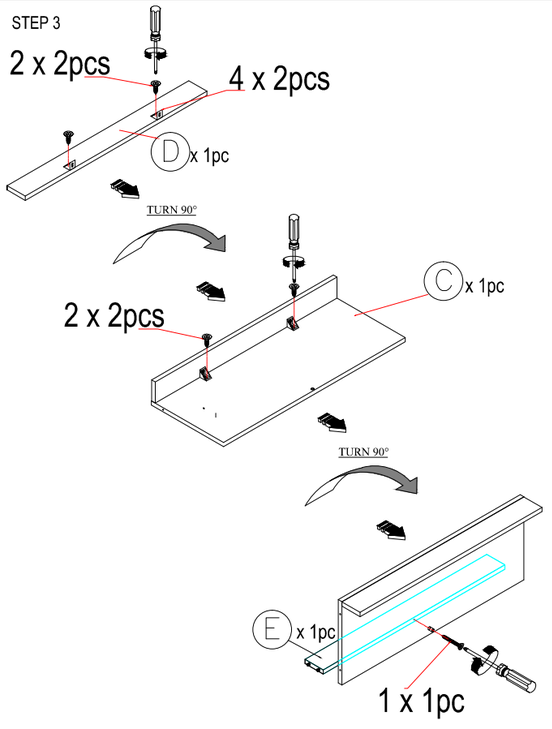

STEP 4

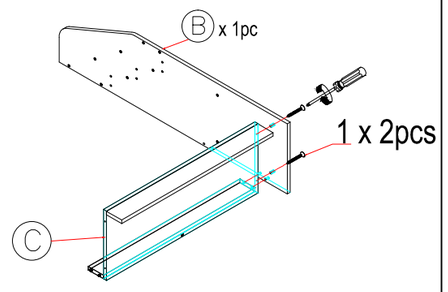

STEP 5

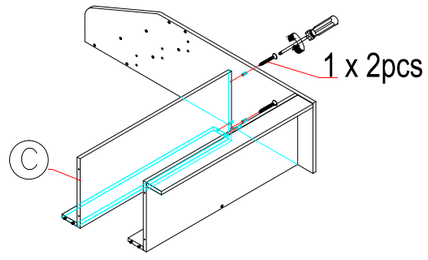

STEP 6

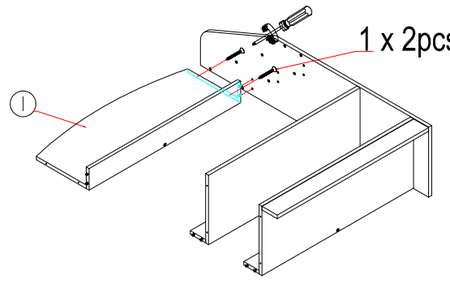

STEP 7

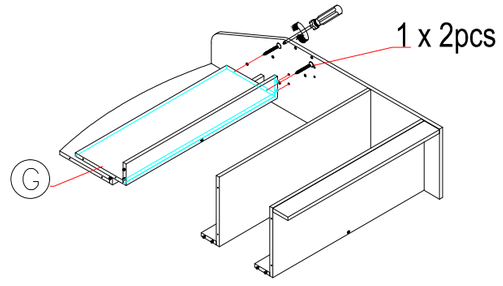

STEP 8

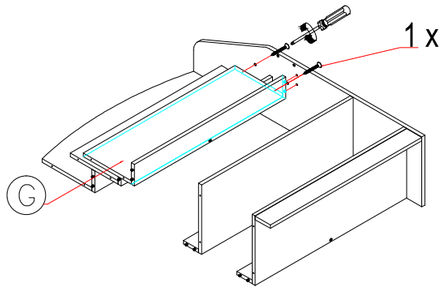

STEP 9

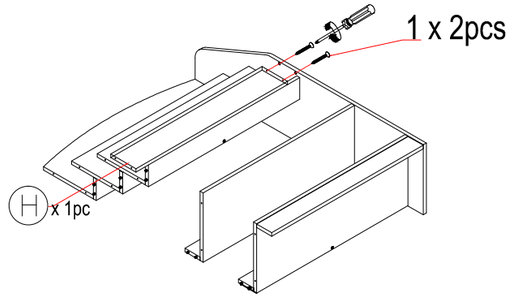

STEP 10

