STEP 12

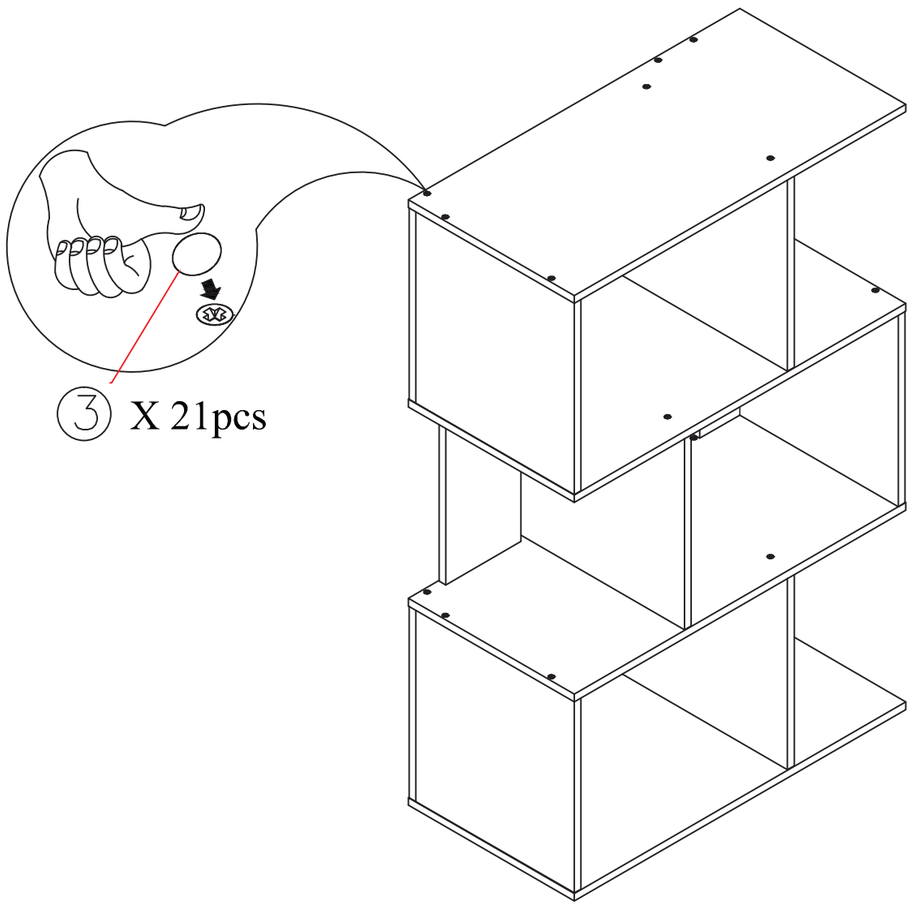

Recommended Maximum Weight

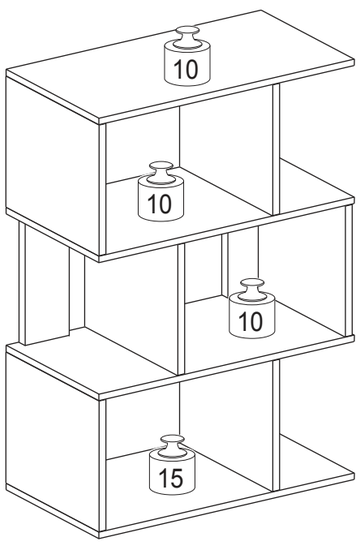

*Unit in Pound(lbs)

WARNING:

>This unit has been designed to support the maximum loads shown. Exceeding these load limits could cause sagging, instability, product collapse, and/or serious injury.

>DO NOT allow children to climb on unit.

>Put heavier items on lower shelves.

Furinno®
Fits Space. Fits Budget

Assembly Instruction

Furinno Simply Modern Open 3-Tier Open Book Shelf
MODEL : **FR16120**

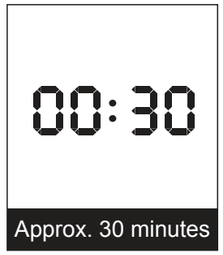

Approx. 30 minutes


Recomm. 2 Person

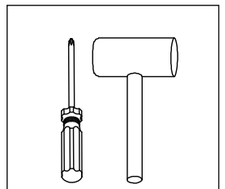
Tool Required

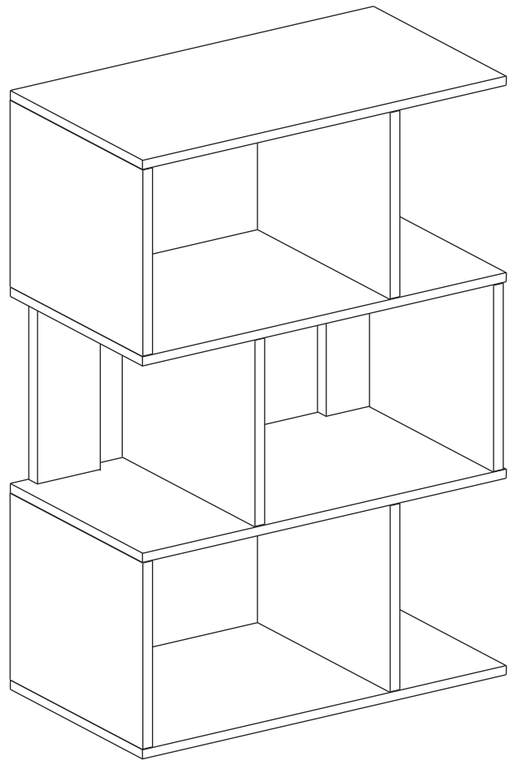

Customer Support

NEED HELP? For replacement requests or product inquiries, please contact our Customer Service Team by emailing us at **support@furinno.com**. Thank you for selecting Furinno!

www.furinno.com

FR1612020181218

NO	HARDWARE LIST	QTY
1	Screw	45pcs
2	Dowel	30pcs
3	Stickers	21pcs

NO	PARTS LIST	QTY
A	TOP PANEL	1pc
B	BOTTOM PANEL	1pc
C	UPPER SHELF PANEL	1pc
D	LOWER SHELF PANEL	1pc
E	SIDE PANEL	3pcs
F	DIVIDER PANEL	3pcs
G	BACK PANEL	3pcs
H	BACK SUPPORT PANEL	3pcs

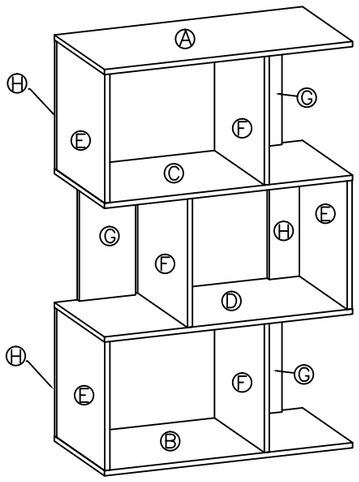

USEFUL HINTS BEFORE YOU START:

1. Read each step carefully before starting.
2. It is important that each step is performed in correct order to avoid difficulties.
3. Identify, sort and count the parts before assembly.
4. Assemble your furniture on packaging cardboard to prevent scratch or damage.
5. Clean the product with mild cleanser using soft damped cloth. Do not use harsh or abrasive cleanser.
6. Using uncompatible hardware might cause damage to product.

STEP 6

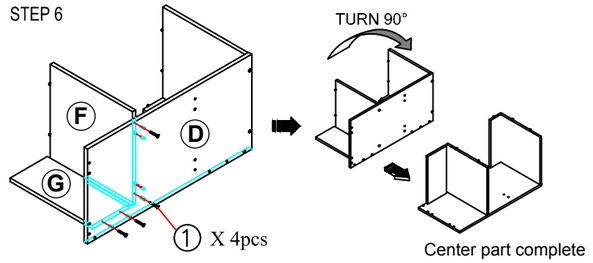

STEP 7

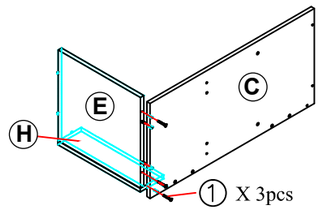

STEP 8

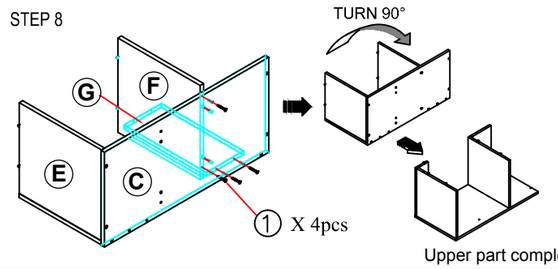

STEP 9

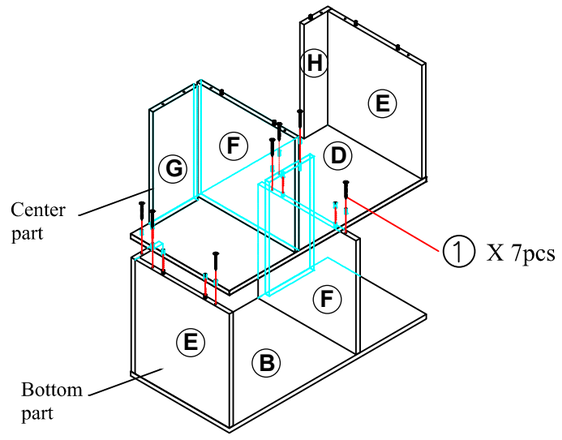

ASSEMBLY INSTRUCTION

STEP 1

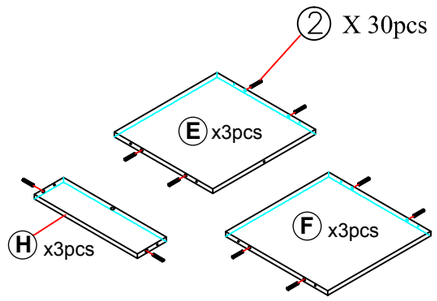

STEP 2

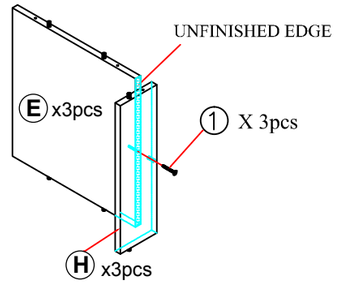

STEP 3

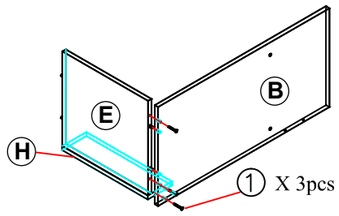

STEP 4

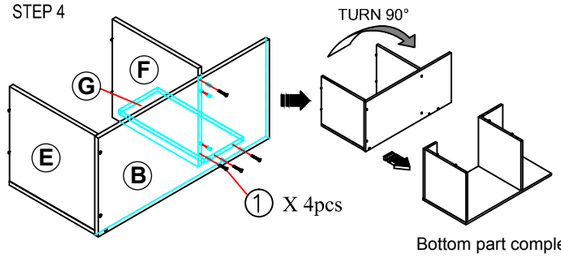

STEP 5

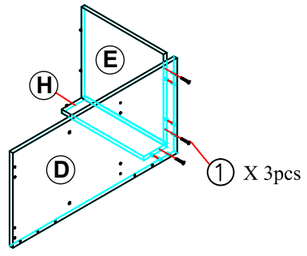

STEP 10

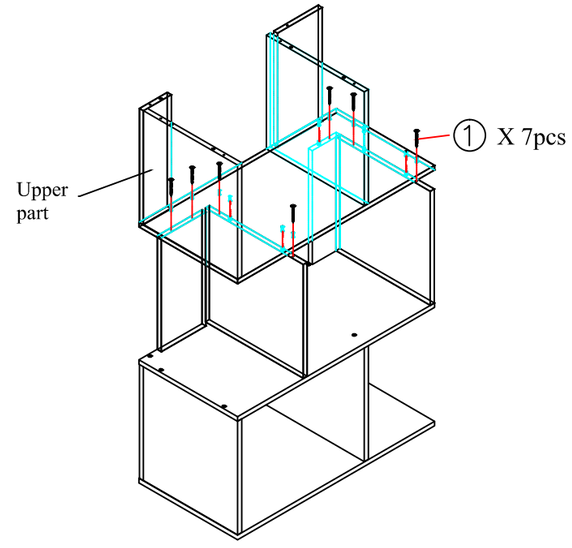

STEP 11

