STEP 12

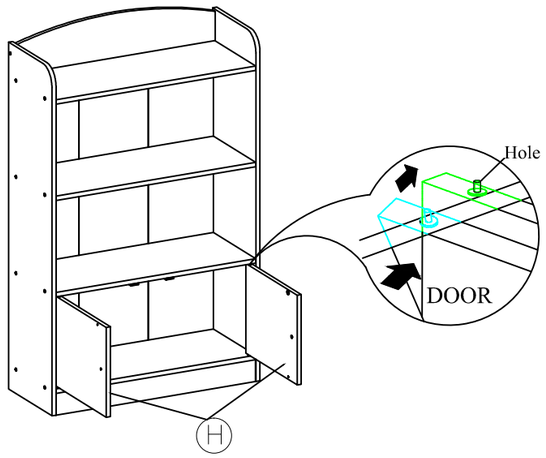

STEP 13

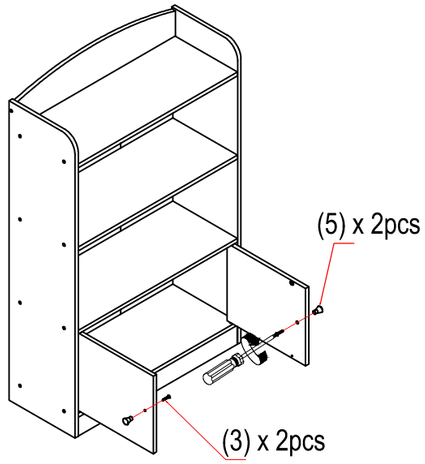

STEP 14

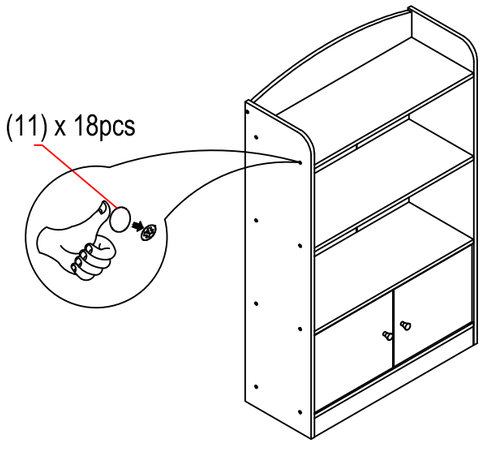

Recommended Maximum Weight

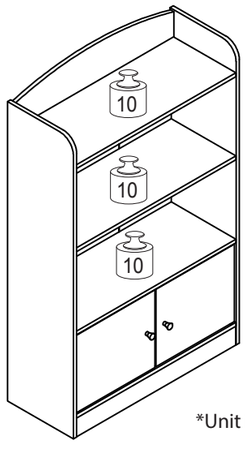

*Unit in Pound(lbs)

WARNING:

>This unit has been designed to support the maximum loads shown. Exceeding these load limits could cause sagging, instability, product collapse, and/or serious injury.

>DO NOT allow children to climb on unit.

>Put heavier items on lower shelves.

Furinno®

Fits Space. Fits Budget

Assembly Instruction

Furinno Bookshelf With Storage Cabinet

MODEL : **FR16121**

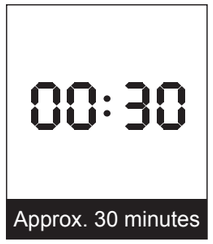

Approx. 30 minutes



Recomm. 2 Person

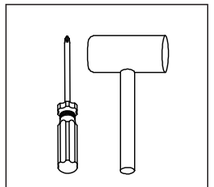

Tool Required

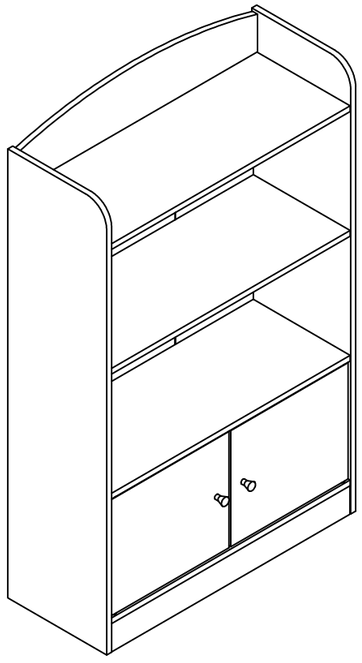

Customer Support

NEED HELP? For replacement requests or product inquiries, please contact our Customer Service Team by emailing us at **support@furinno.com**. Thank you for selecting Furinno!

www.furinno.com

NO	HARDWARE LIST	QTY
1	Long Screw	18pcs
2	Short Screw	4pcs
3	Middle Screw	2pcs
4	Dowel	2pcs
5	Handle	2pcs
6	Door Support	4pcs
7	Magnet	2pcs
8	Tapping Screw	2pcs
9	L Bracket	2pcs
10	Power Pin	20pcs
11	Round Sticker	18pcs

NO	PARTS LIST	QTY
A	LEFT SIDE PANEL	1pc
B	RIGHT SIDE PANEL	1pc
C	BOTTOM PANEL	1pc
D	FRONT SUPPORT PANEL	1pc
E	LOWER SHELF PANEL	1pc
F	SHELF PANEL	2pcs
G	BACK SUPPORT PANEL	1pc
H	LEFT / RIGHT DOOR PANEL	2pcs
I	BACK PANEL	3pcs

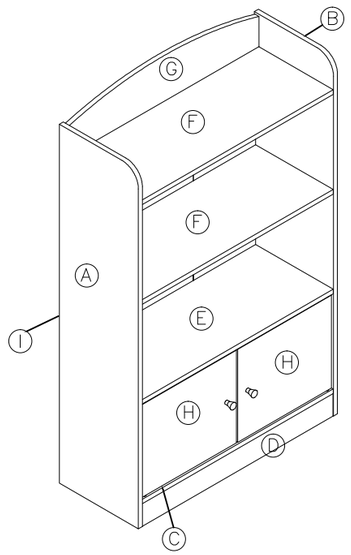

USEFUL HINTS BEFORE YOU START:

1. Read each step carefully before starting.
2. It is important that each step is performed in correct order to avoid difficulties.
3. Identify, sort and count the parts before assembly.
4. Assemble your furniture on packaging cardboard to prevent scratch or damage.
5. Clean the product with mild cleanser using soft damped cloth. Do not use harsh or abrasive cleanser.
6. Using uncompatible hardware might cause damage to product.

ASSEMBLY INSTRUCTION

STEP 1

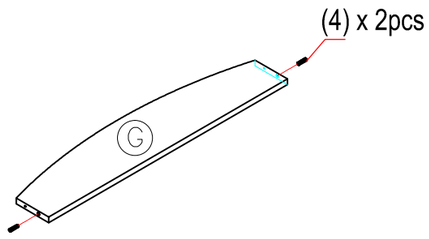

STEP 2

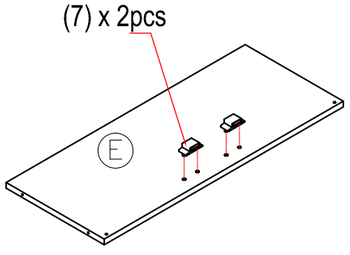

STEP 3

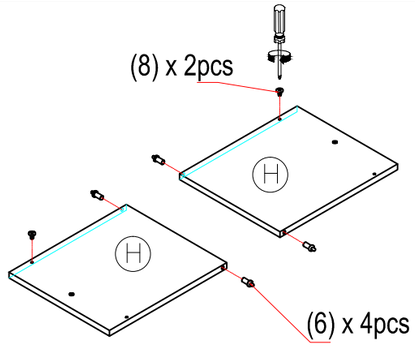

STEP 4

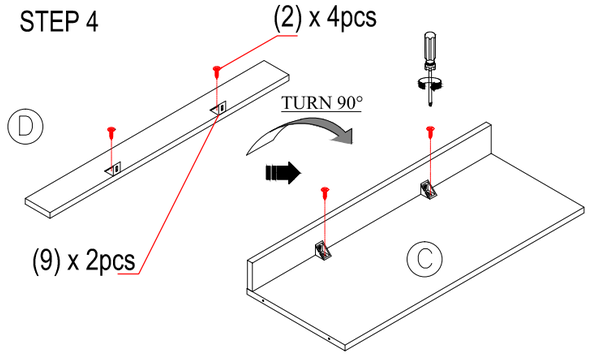

STEP 5

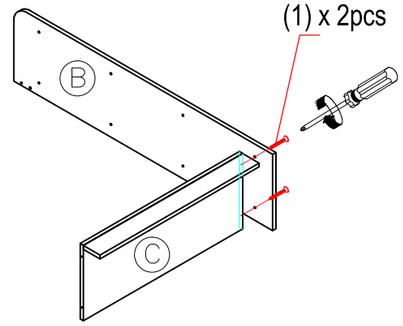

STEP 6

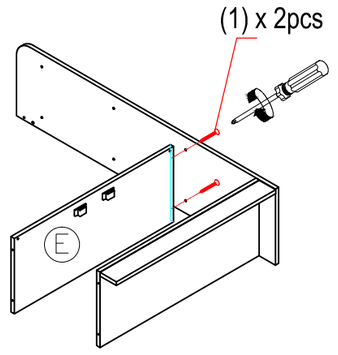

STEP 7

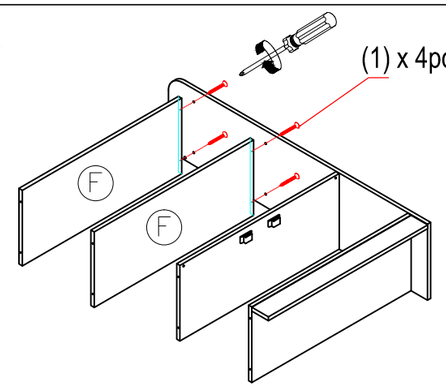

STEP 8

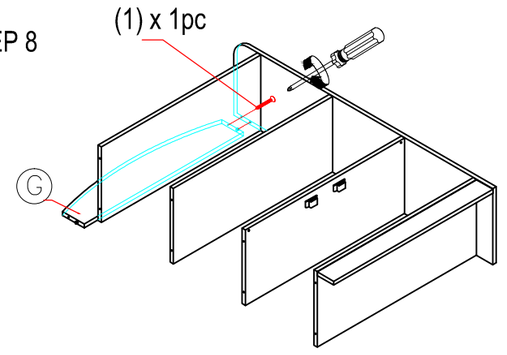

STEP 9

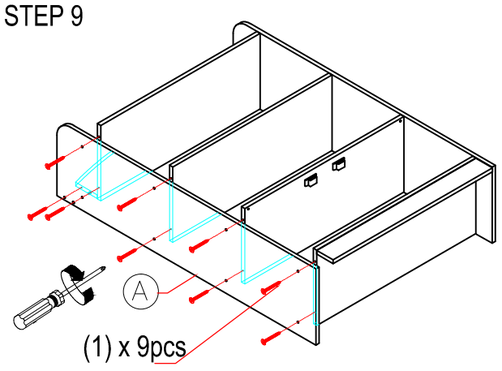

STEP 10

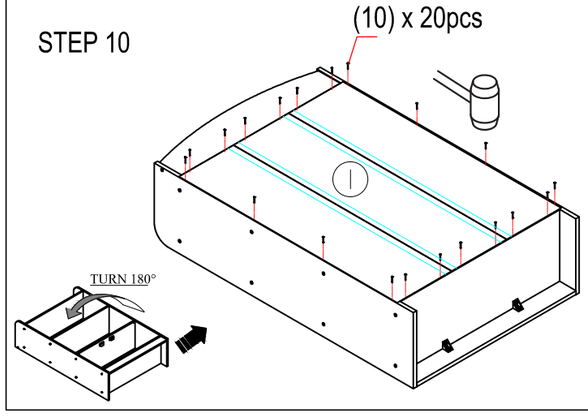

STEP 11

