FR18513

Furinno Open Bath Cabinet

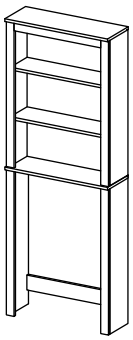

www.furinno.com

NEED HELP? For replacement requests or product inquiries, please contact our Customer Service Team by emailing us at **support@furinno.com**. Thank you for selecting Furinno!

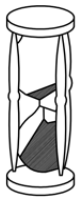
45 min


x 2

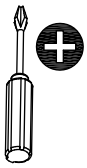
Tools Required

USEFUL HINTS BEFORE YOU START:

1. Read each step carefully before starting.
2. It is important that each step is performed in correct order to avoid difficulties.
3. Identify, sort and count the parts before assembly.
4. Assemble your furniture on packaging cardboard to prevent scratch or damage.
5. Clean the product with mild cleanser using soft damped cloth. Do not use harsh or abrasive cleanser.
6. Using uncompatible hardware might cause damage to product.

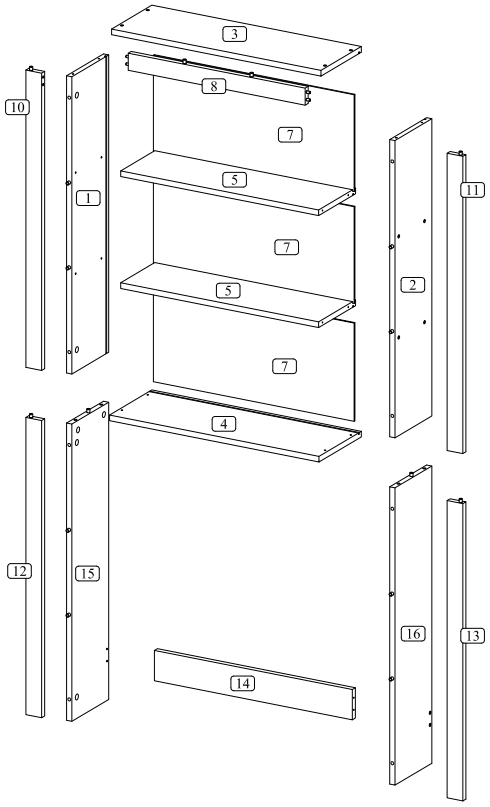

A 20 x  ø8x35 mm	B 1 x 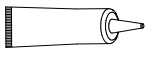 ø25x105 mm	C 12 x  ø7x35 mm	D 12 x 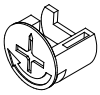 ø15x12 mm	E 12 x  14x10 mm
F 12 x  ø6x5/8" FH	G 2 x  148x18x3 mm	H 2 x 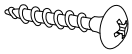 ø6x5/8" RH	I 16 x  ø14 mm	J 8 x 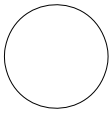 ø20 mm

1

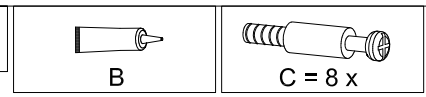

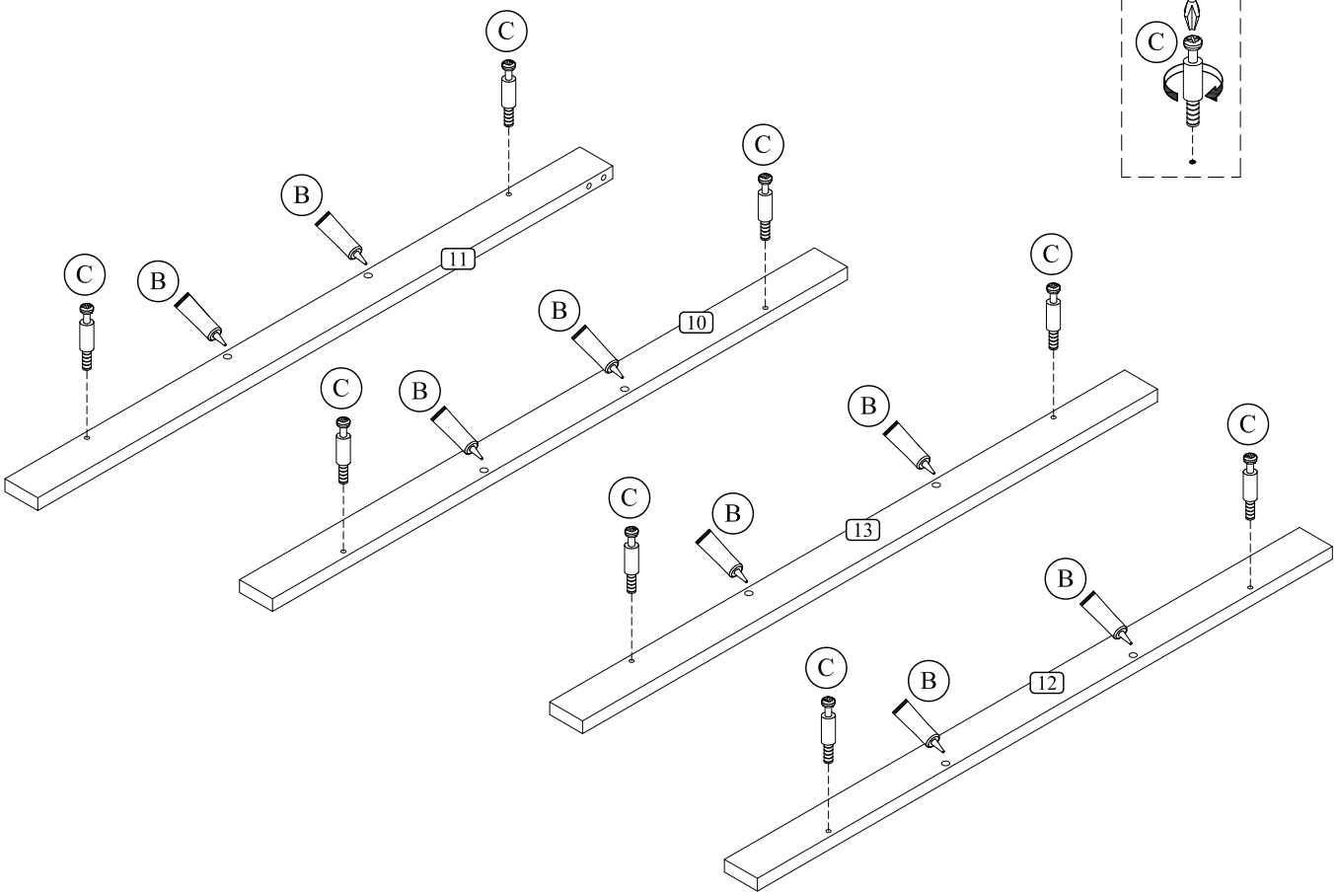

2



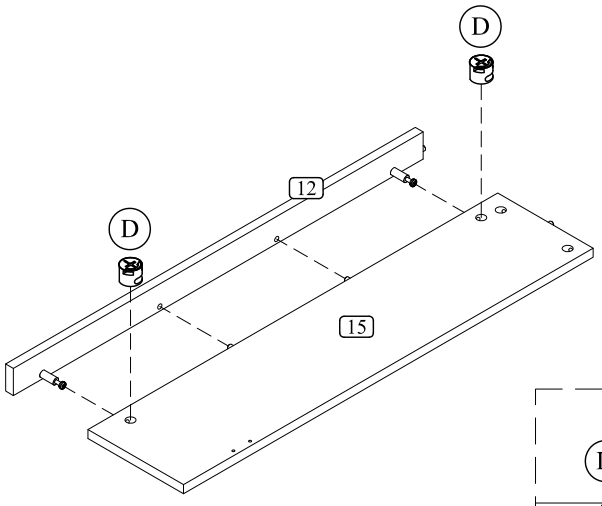

Part. A

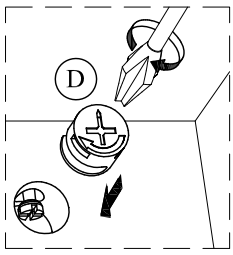

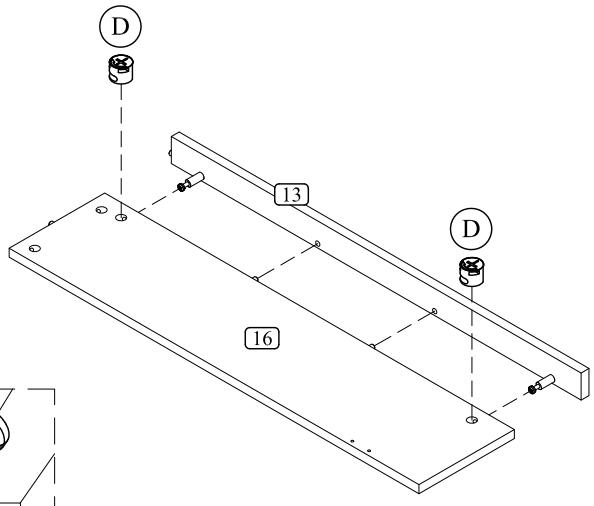

Part. B

3



D = 4 x

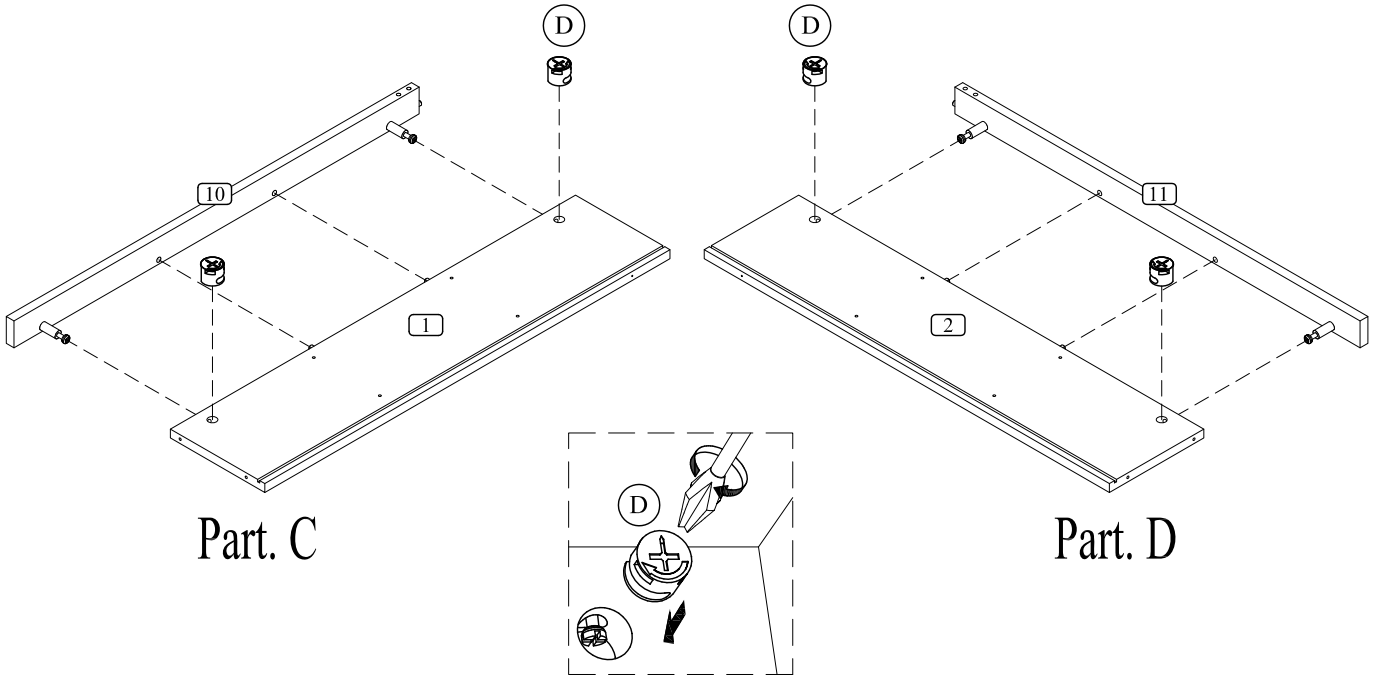

Part. C

Part. D

4



A = 4 x

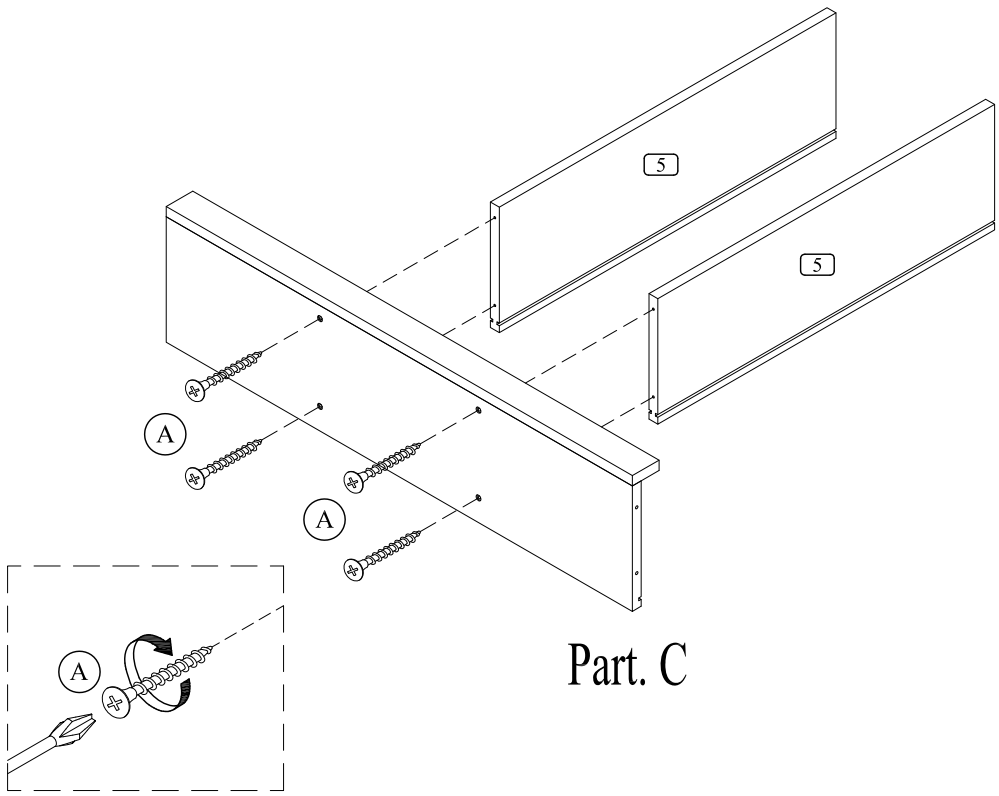

Part. C

5

A = 4 x

B

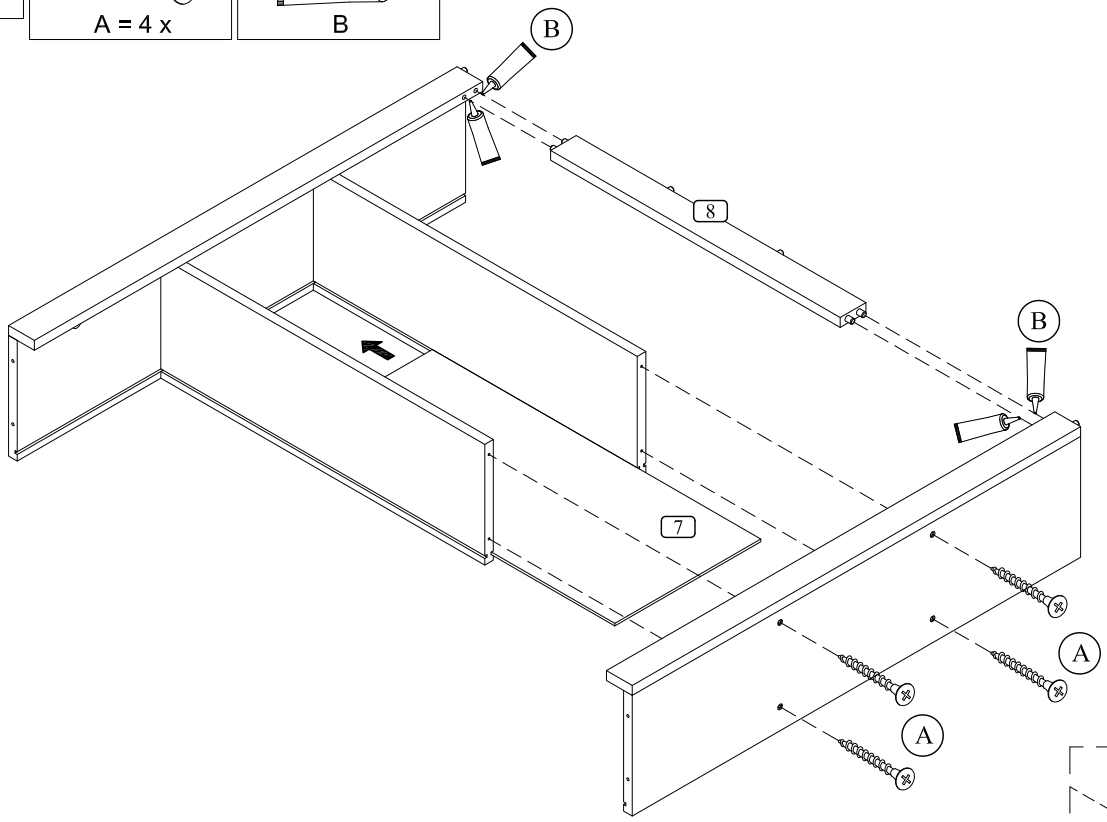

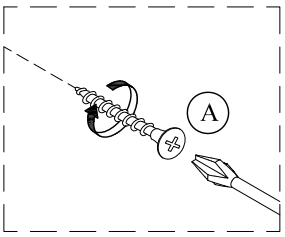

Part. D

6

A = 8 x

B

C = 4 x

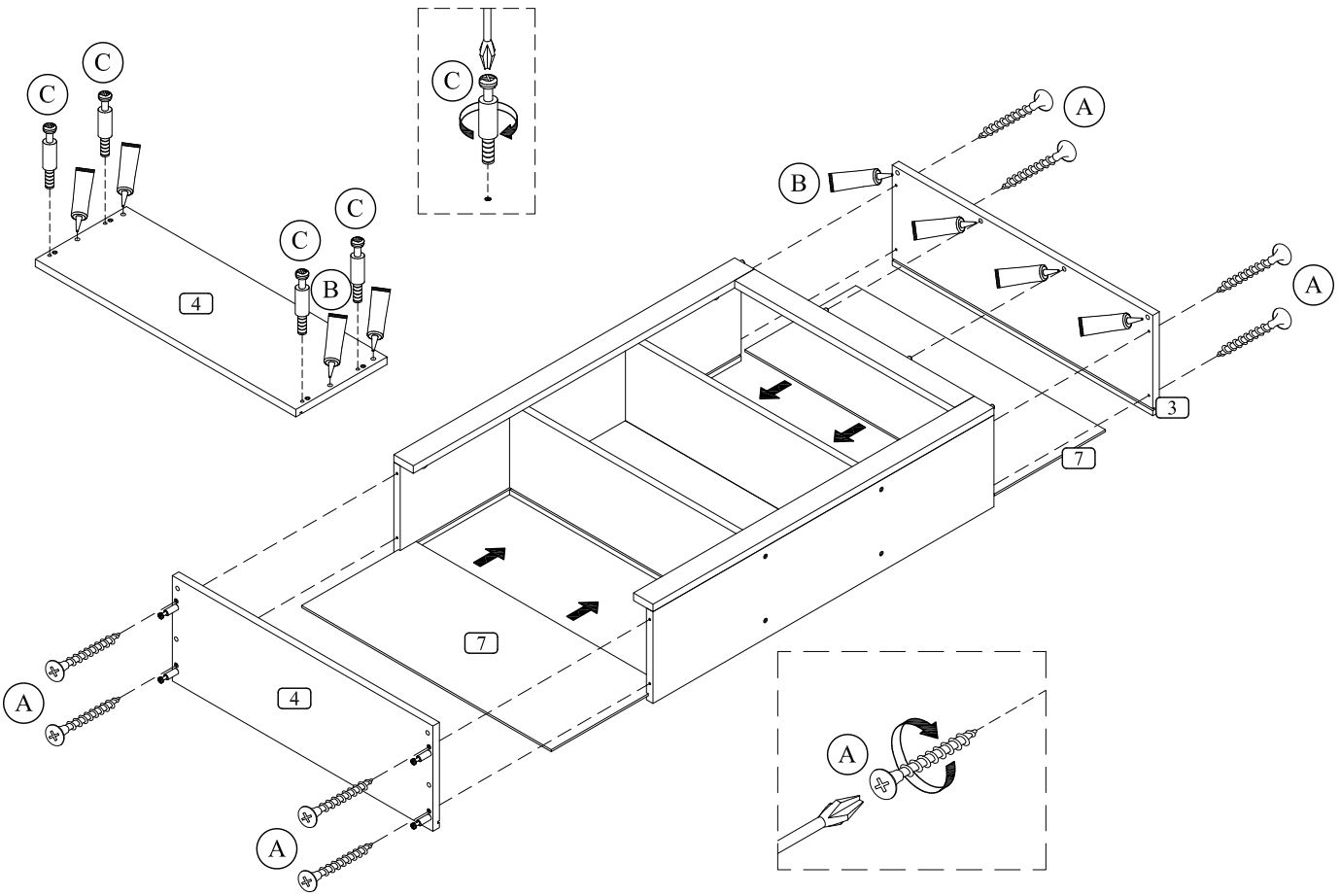

7



A = 4 x

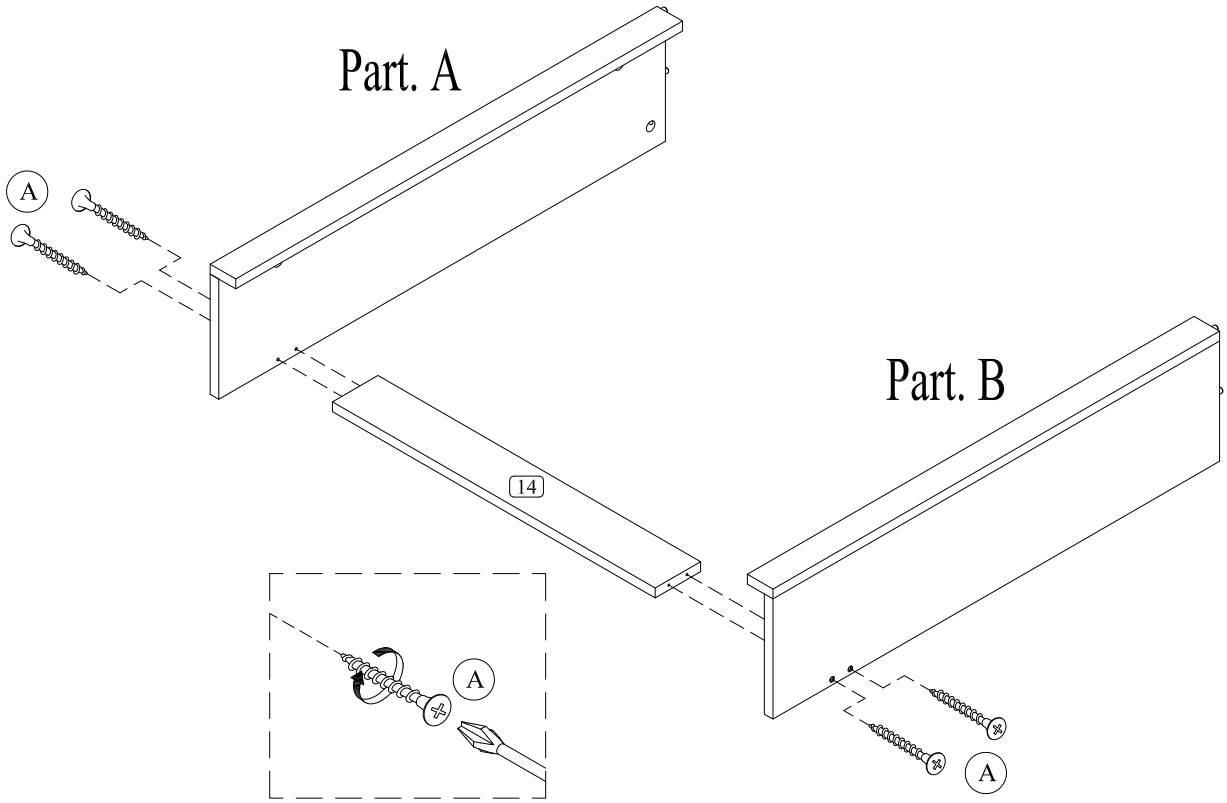

8



D = 4 x

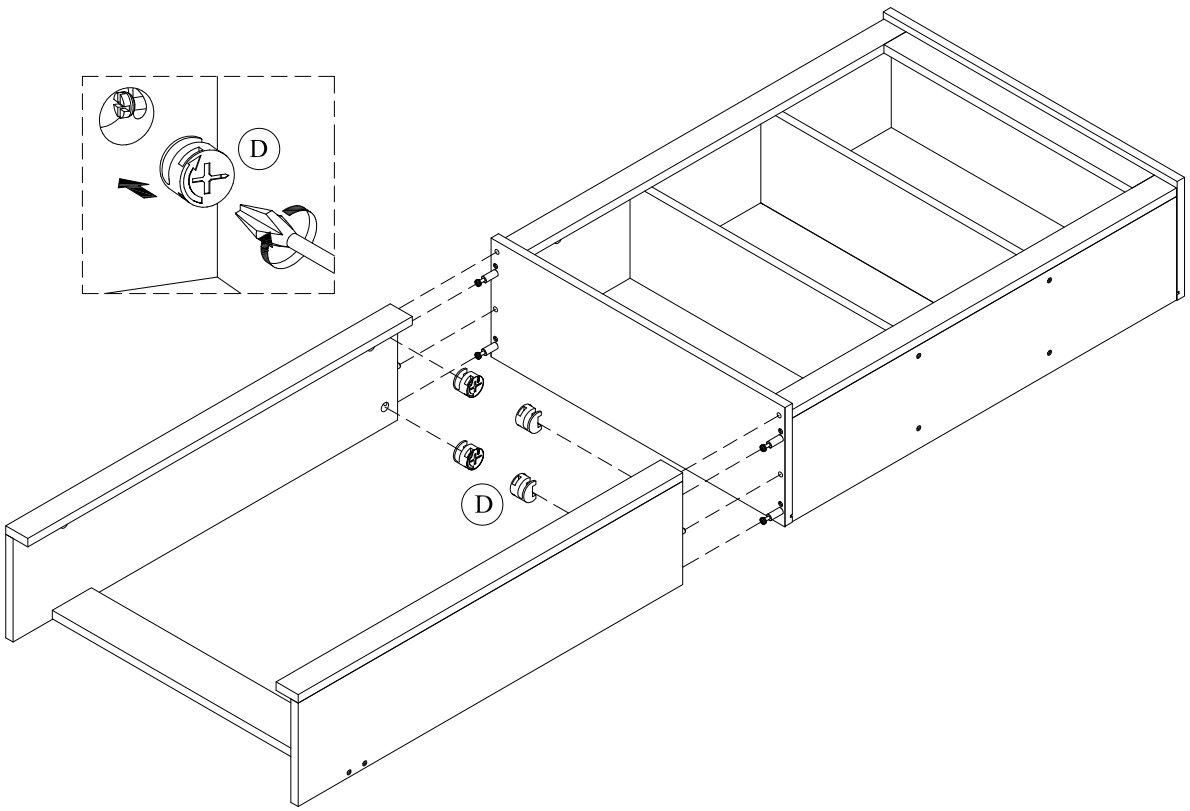

9

E = 12 x | F = 12 x | I = 16 x | J = 8 x

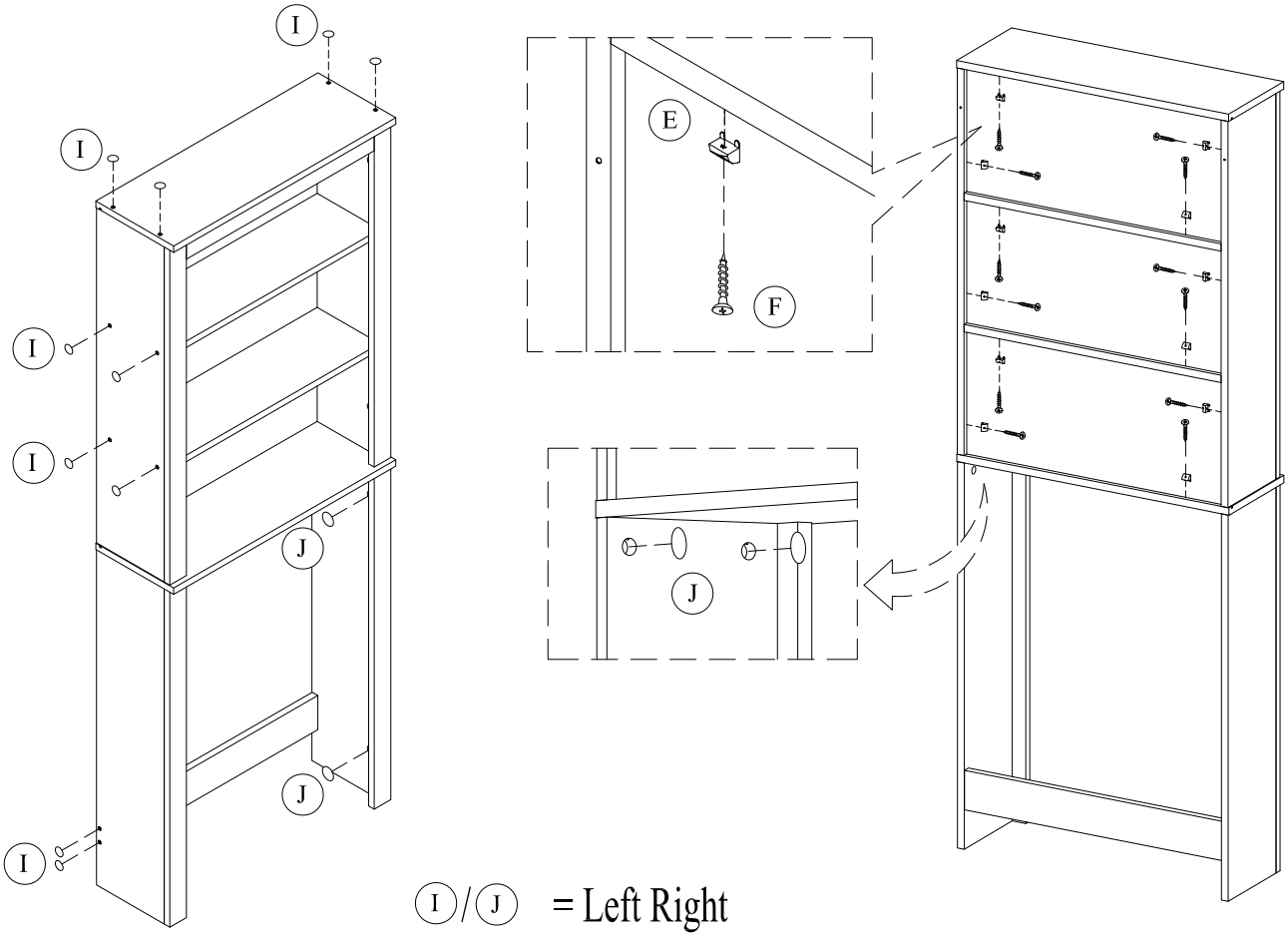

(I)/(J) = Left Right

10

G = 2 x | H = 2 x

