FR18515

Furinno Louver Door Bath Cabinet

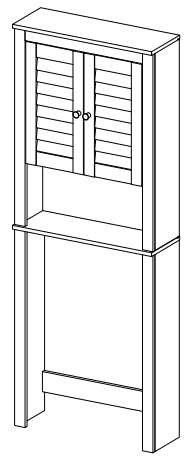

Fits Space. Fits Budget

www.furinno.com

NEED HELP? For replacement requests or product inquiries, please contact our Customer Service Team by emailing us at **support@furinno.com**. Thank you for selecting Furinno!

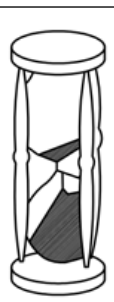

60 min

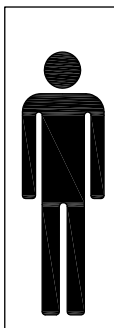

x 2

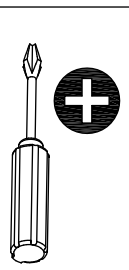

Tools Required

USEFUL HINTS BEFORE YOU START:

1. Read each step carefully before starting.
2. It is important that each step is performed in correct order to avoid difficulties.
3. Identify, sort and count the parts before assembly.
4. Assemble your furniture on packaging cardboard to prevent scratch or damage.
5. Clean the product with mild cleanser using soft damped cloth.
   Do not use harsh or abrasive cleanser.
6. Using uncompatible hardware might cause damage to product.

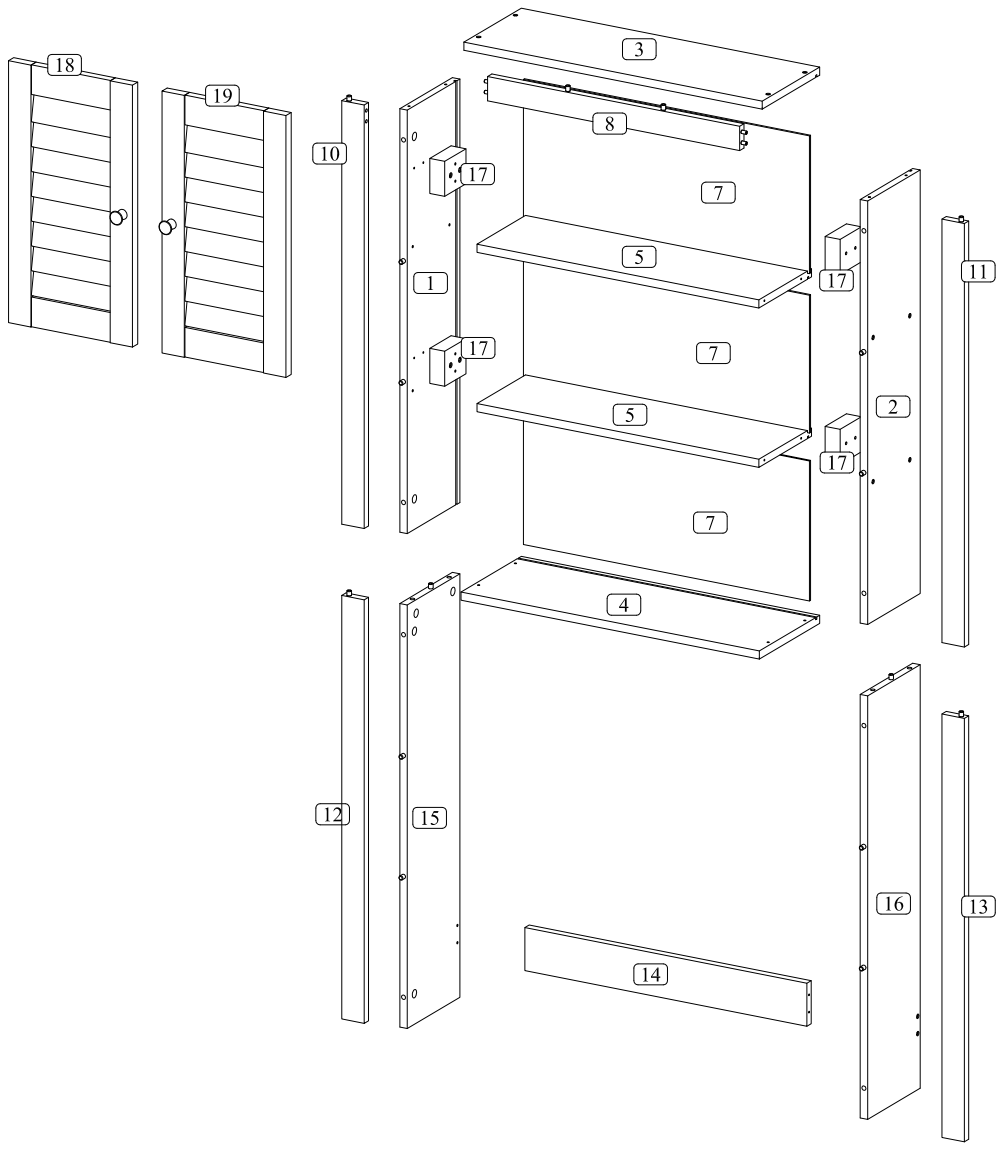

A 28 x	B 1 x	C 12 x	D 12 x	E 12 x	F 12 x	G 2 x
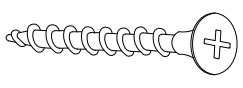		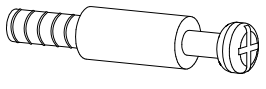	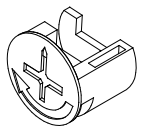	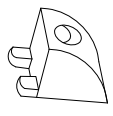	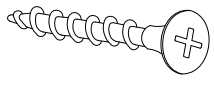	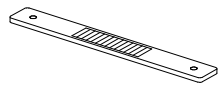
ø8x35 mm	ø25x105 mm	ø7x35 mm	ø15x12 mm	14x10 mm	ø6x5/8" FH	148x18x3 mm
H 2 x	I 16 x	J 8 x	K 2 x	L 2 x	M 4 x	N 16 x
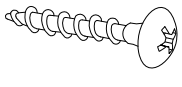	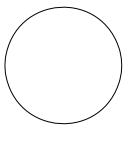	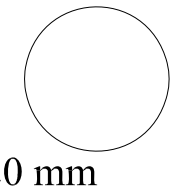	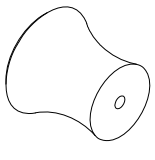	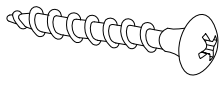	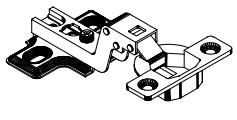	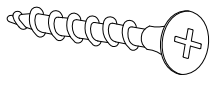
ø6x5/8" RH	ø14 mm	ø20 mm	ø25x23 mm	ø8x25 mm	ø86x53x30 mm	ø6x1/2"

1

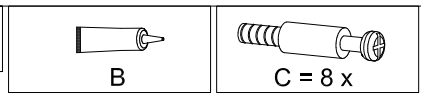

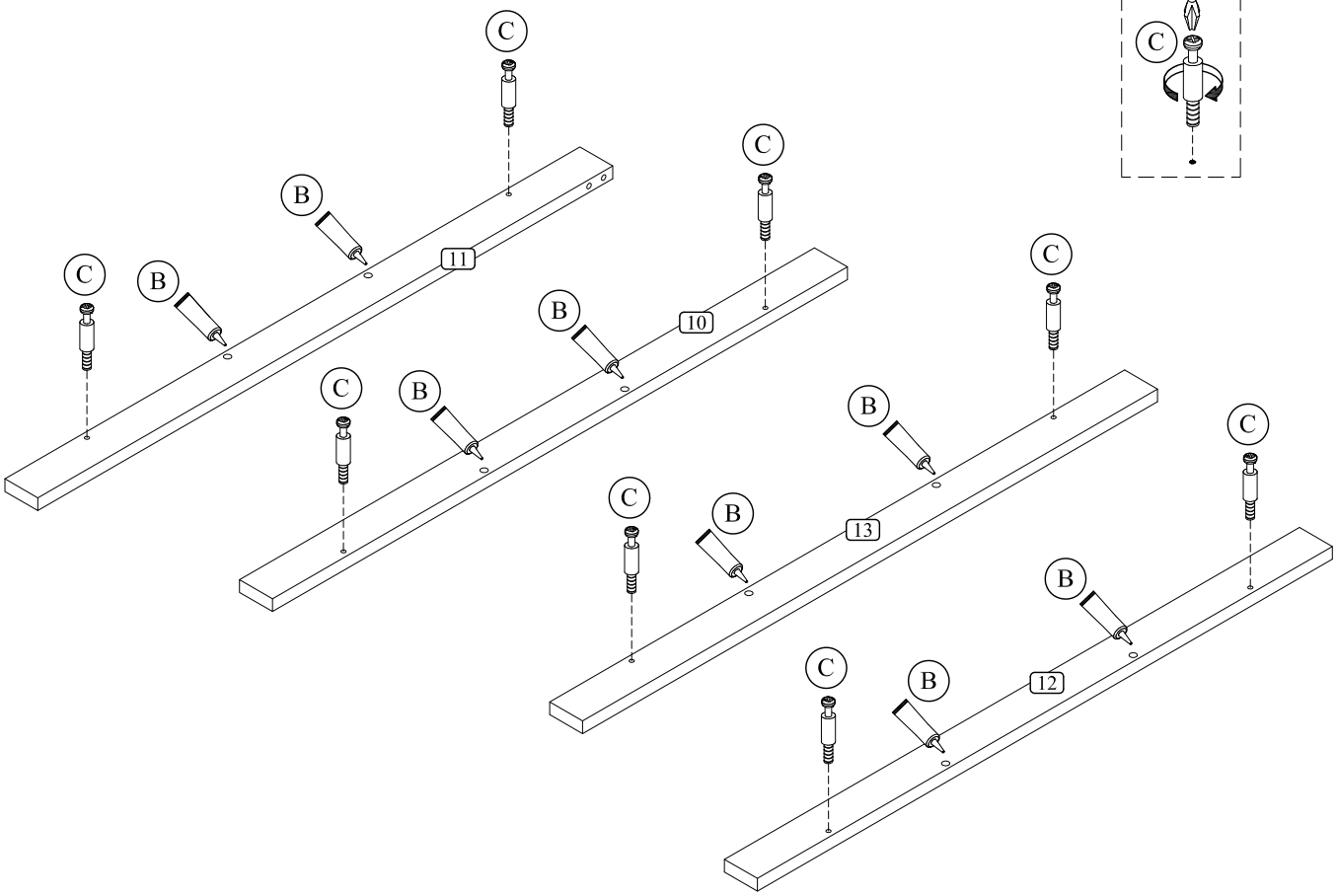

2

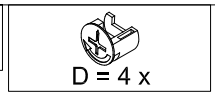

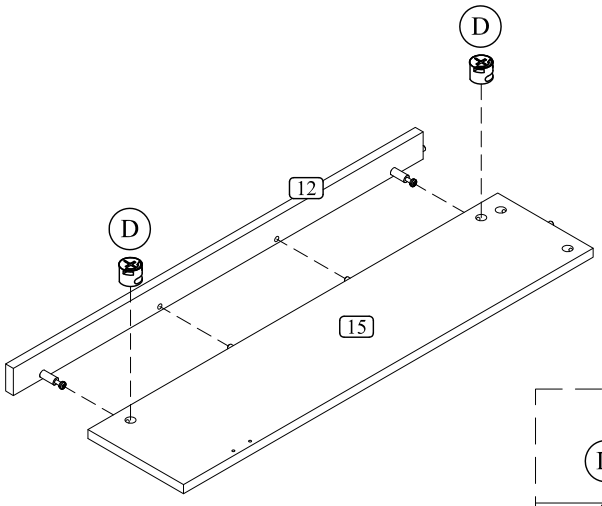

Part. A

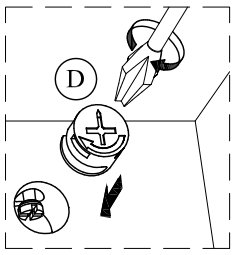

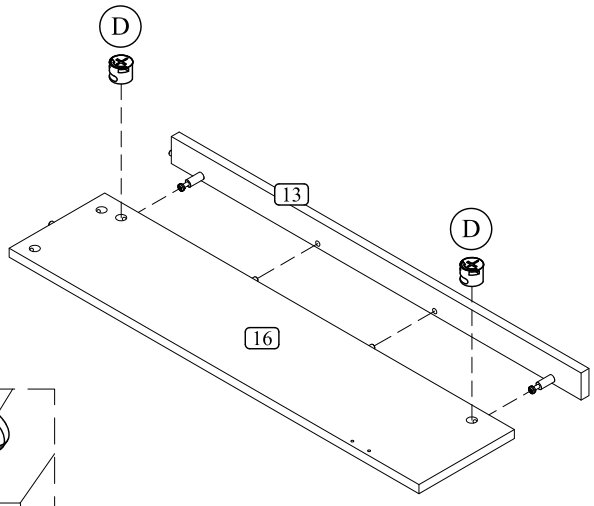

Part. B

3

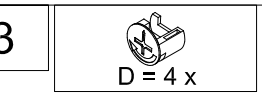

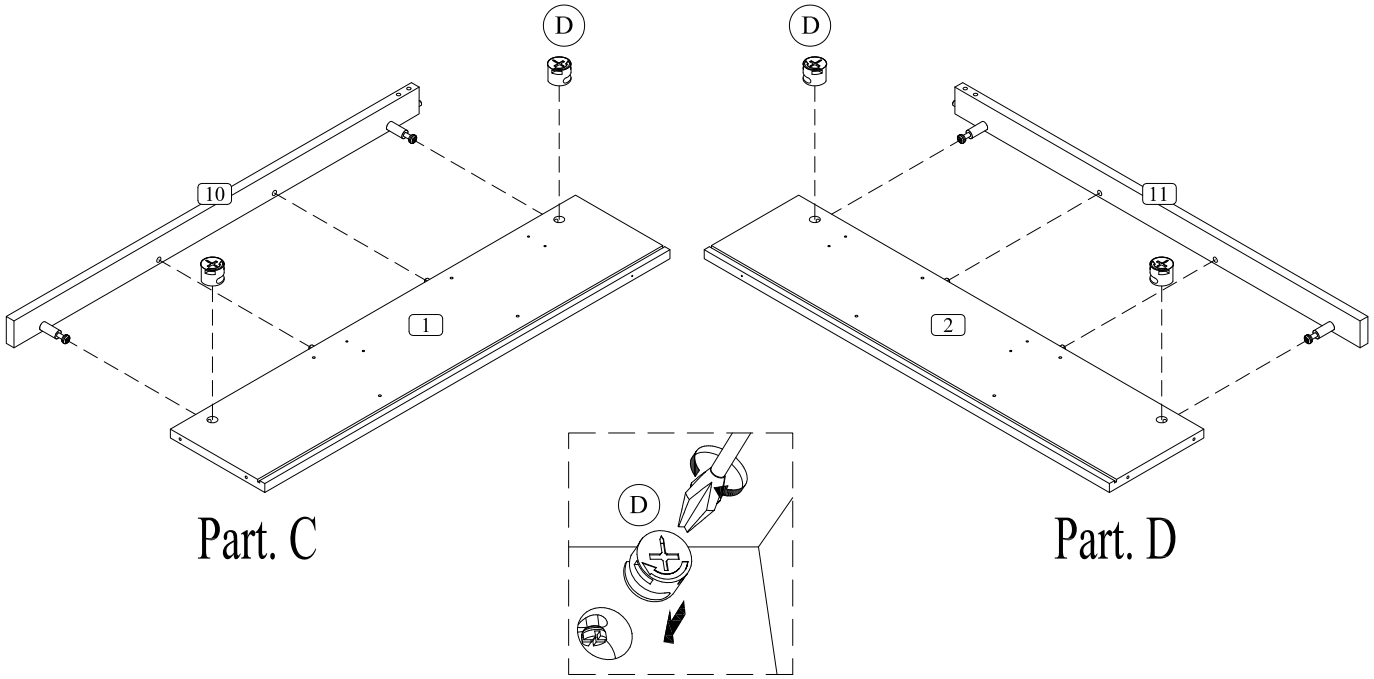

Part. C

Part. D

4

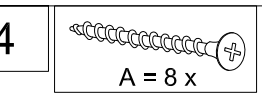

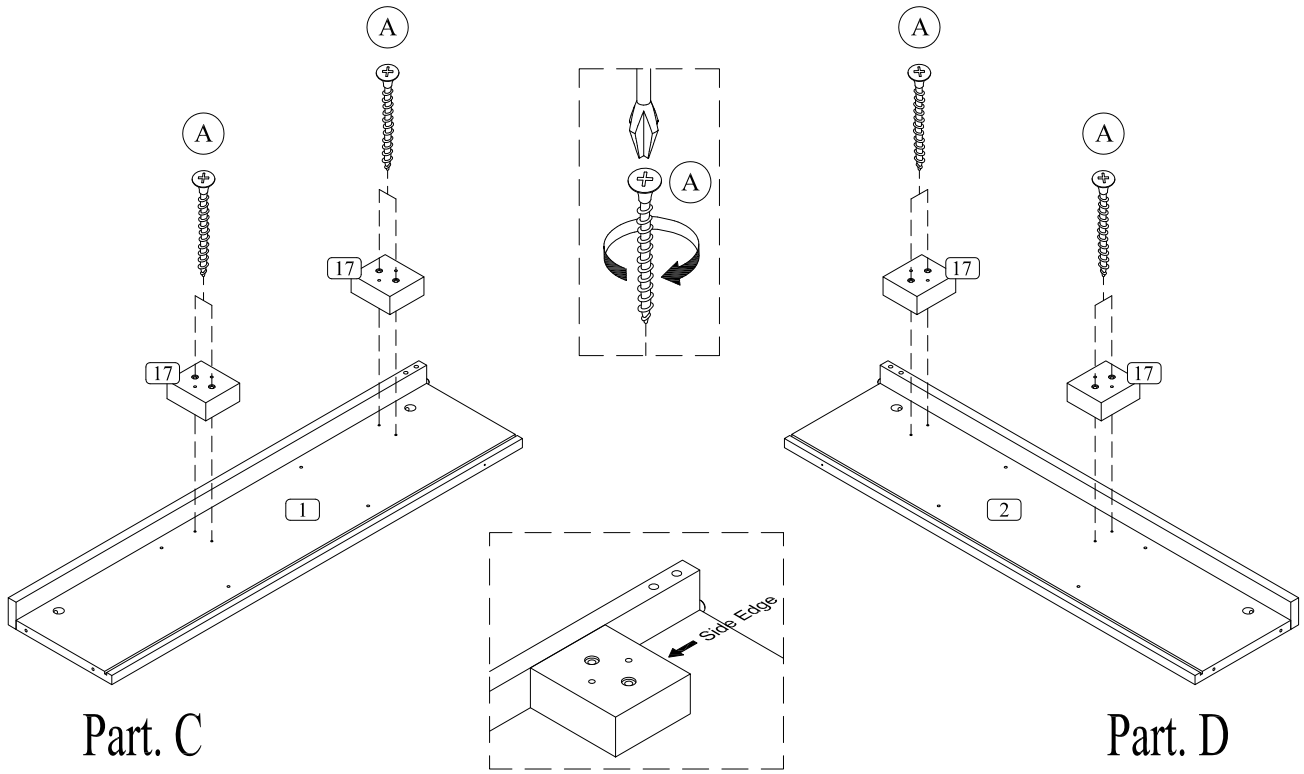

Part. C

Part. D

5

A = 4 x

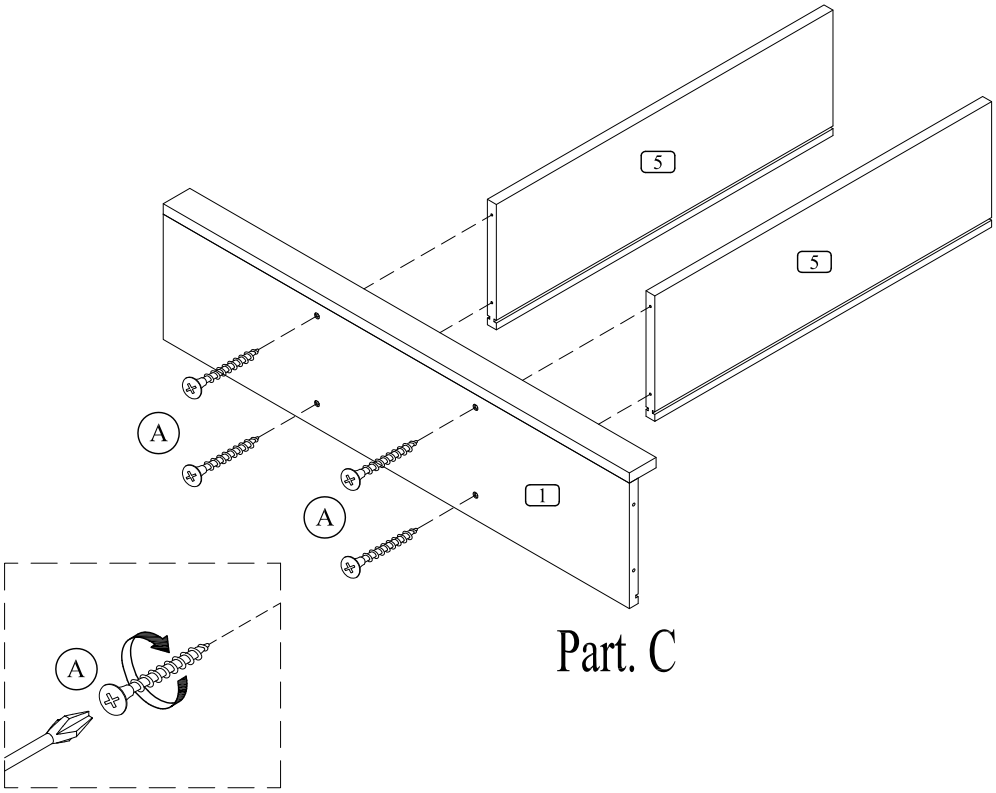

Part. C

6

B

A = 4 x

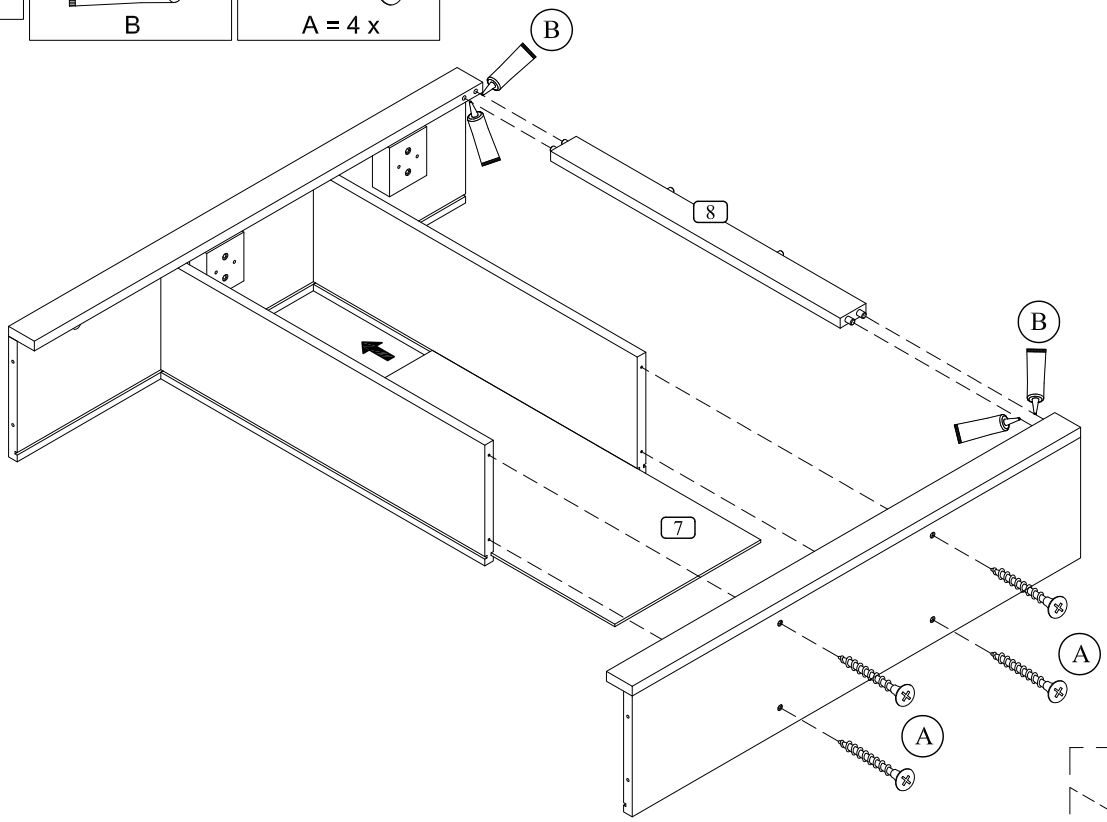

Part. D

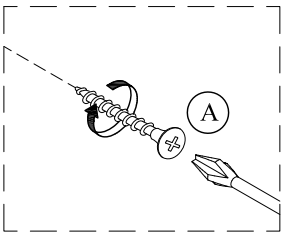

7

A = 8 x

B

C = 4 x

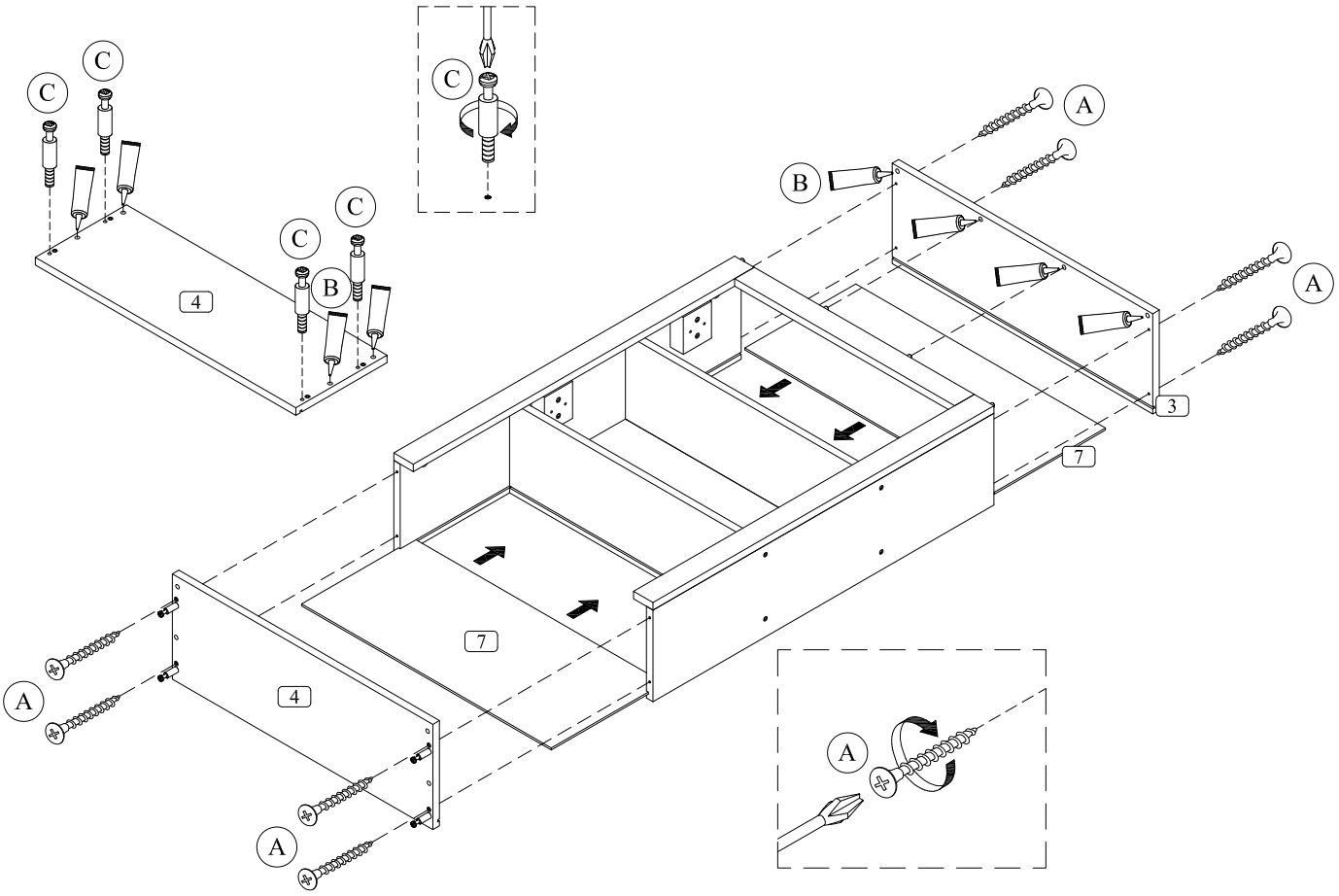

8

A = 4 x

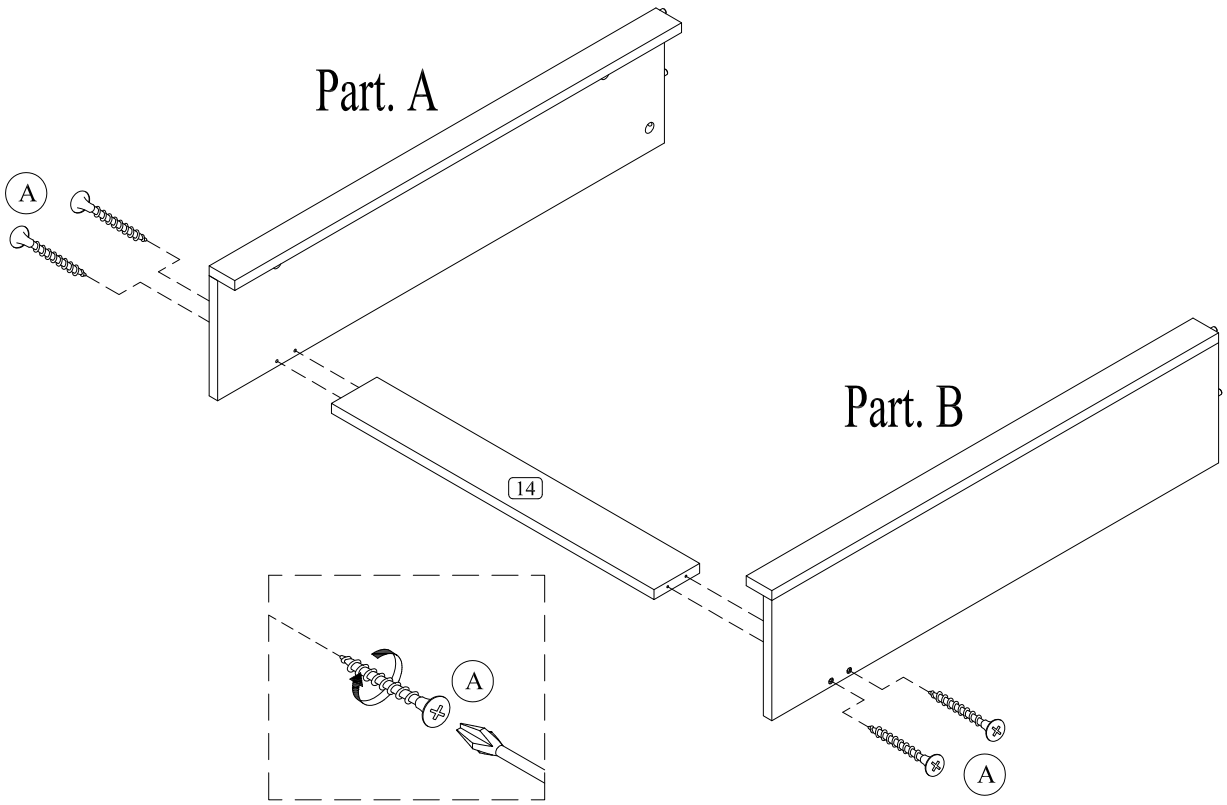

9



D = 4 x

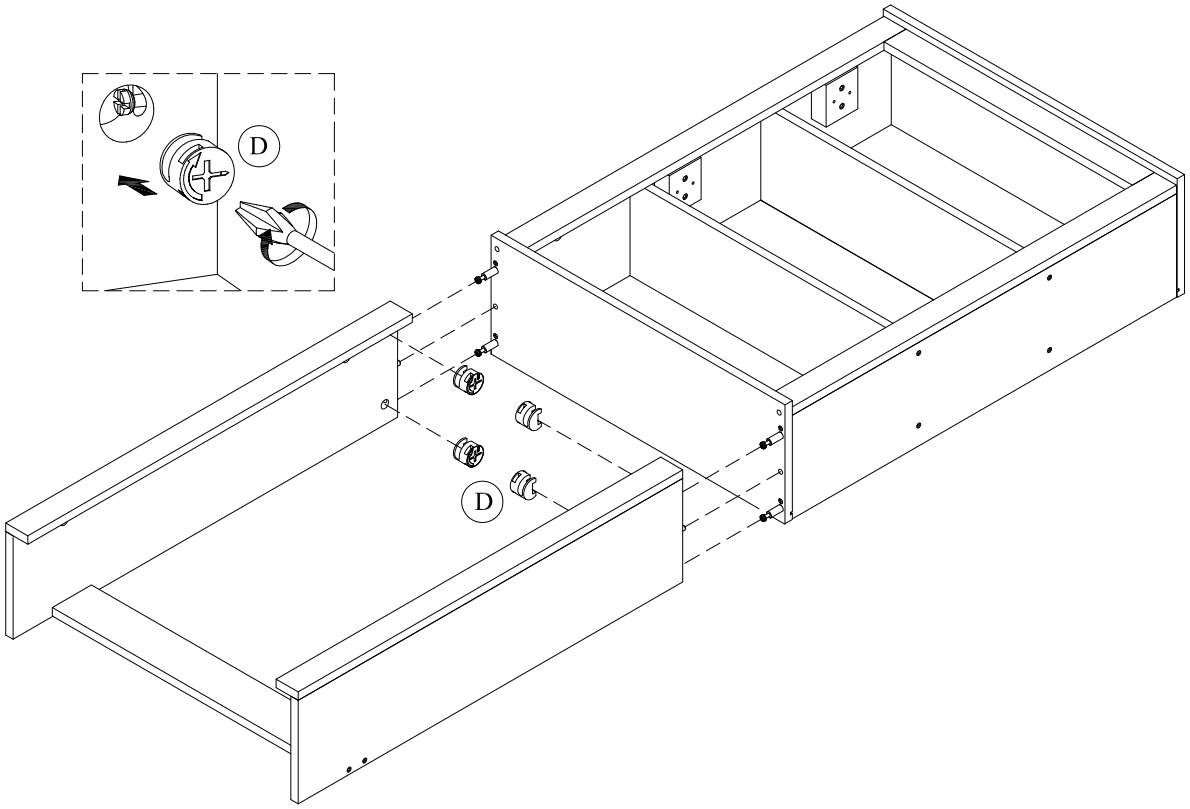

10



K = 2 x

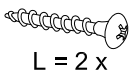

L = 2 x



M = 4 x



N = 8 x

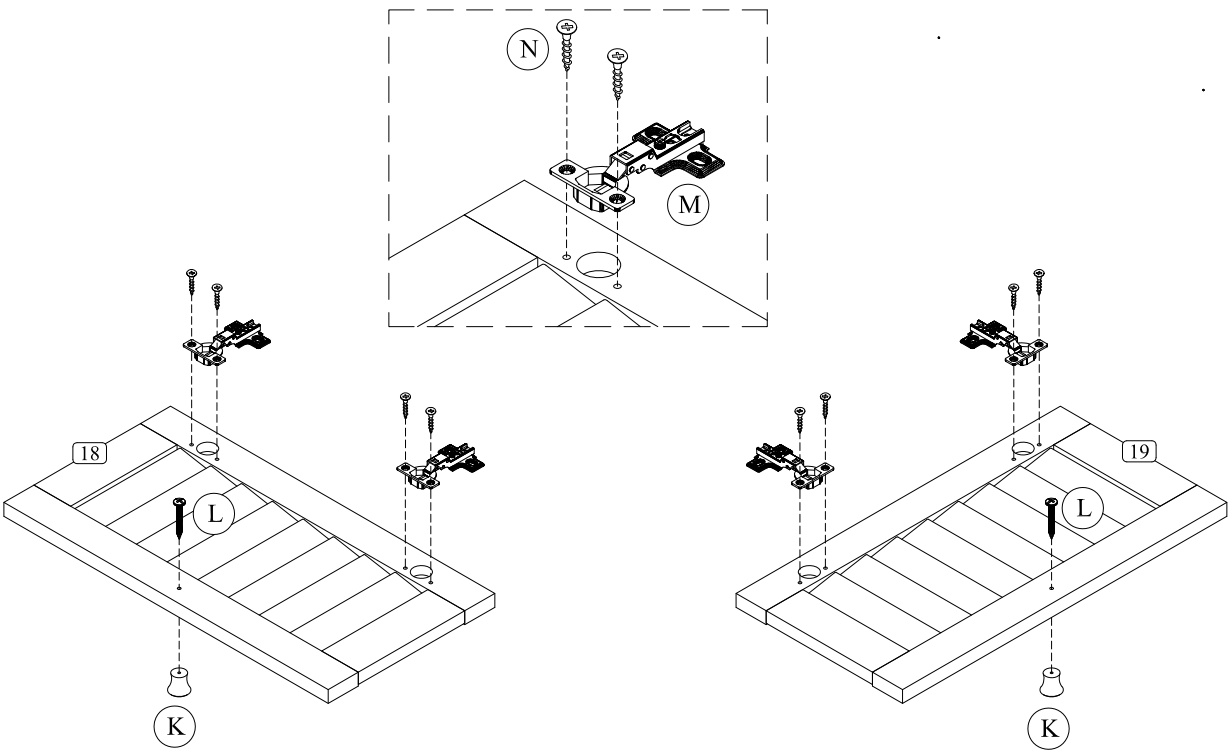

11

E = 12 x | F = 12 x | I = 16 x | J = 8 x | N = 8 x

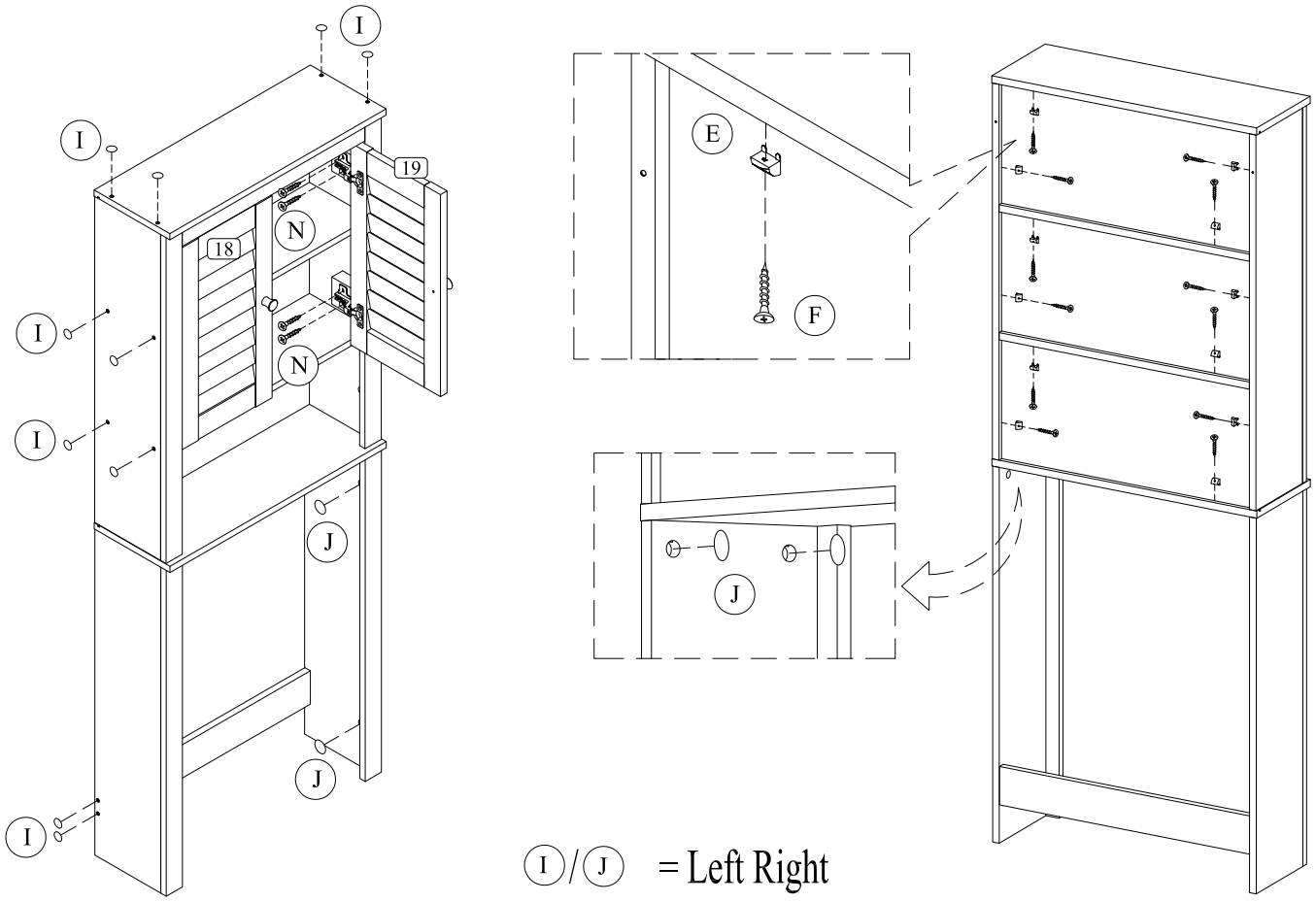

12

G = 2 x | H = 2 x

