FR18697

Furinno Corner Louver Door Cabinet

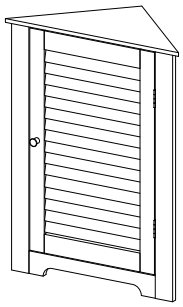

www.furinno.com

NEED HELP? For replacement requests or product inquiries, please contact our Customer Service Team by emailing us at **support@furinno.com**. Thank you for selecting Furinno!

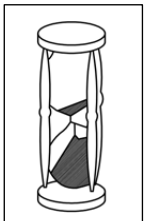
40 min

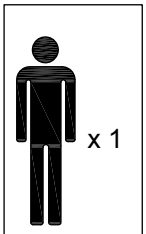
x 1

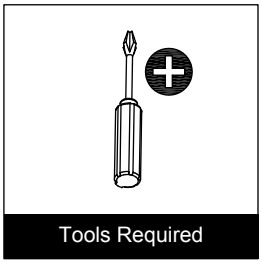
Tools Required

USEFUL HINTS BEFORE YOU START:

1. Read each step carefully before starting.
2. It is important that each step is performed in correct order to avoid difficulties.
3. Identify, sort and count the parts before assembly.
4. Assemble your furniture on packaging cardboard to prevent scratch or damage.
5. Clean the product with mild cleanser using soft damped cloth. Do not use harsh or abrasive cleanser.
6. Using uncompatible hardware might cause damage to product.

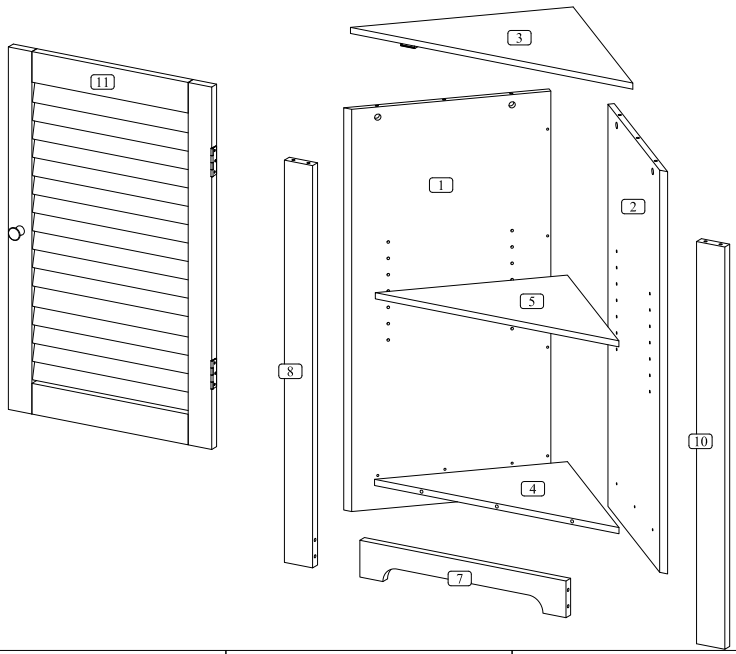

A 10 x  ø8x35 mm	B 4 x  ø4.8x16 mm	C 6 x 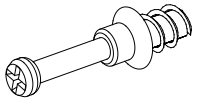 ø8.5x24 mm	D 6 x  ø15x9.6 mm	E 12 x 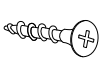 ø5x1/2"
F 1 x 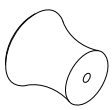 ø25x23 mm	G 1 x  ø8x25 mm	H 2 x 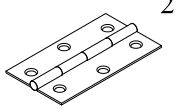 55x33x5 mm	I 1 x 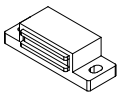 48x16x14 mm	J 1 x 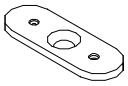 36x13x1 mm	K 4 x 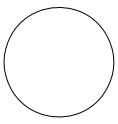 ø20 mm
L 1 x 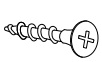 ø6x1/2" FH	M 10 x  ø14 mm	N 1 x 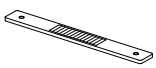 148x18x3 mm	O 1 x  ø6x5/8" RH	P 2 x 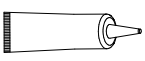 ø25x105 mm	Q 2 x 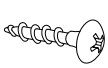 ø6x1/2" RH

1

A = 3 x

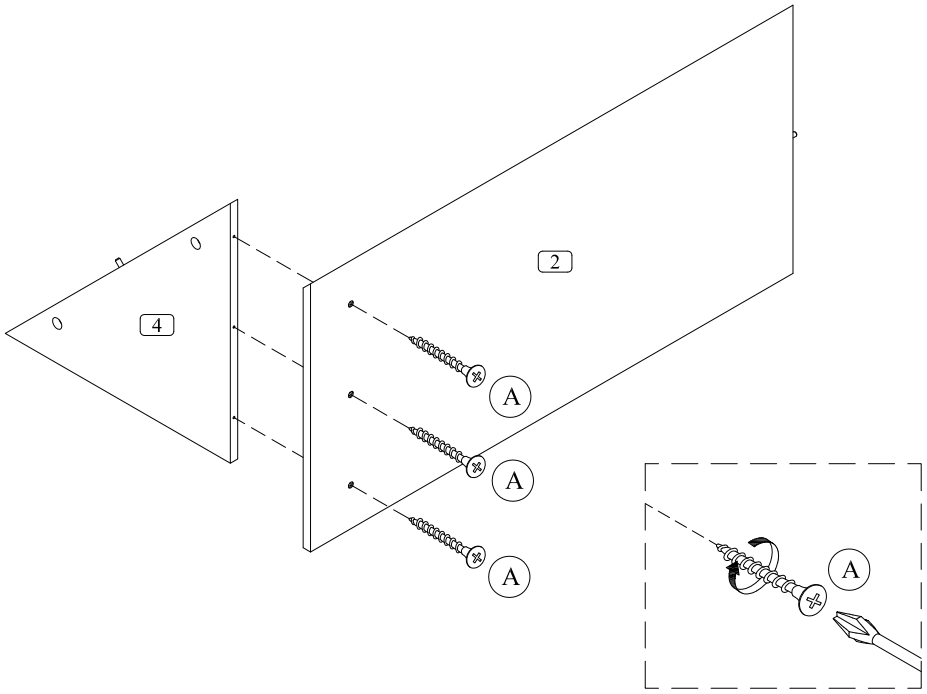

2

A = 7 x

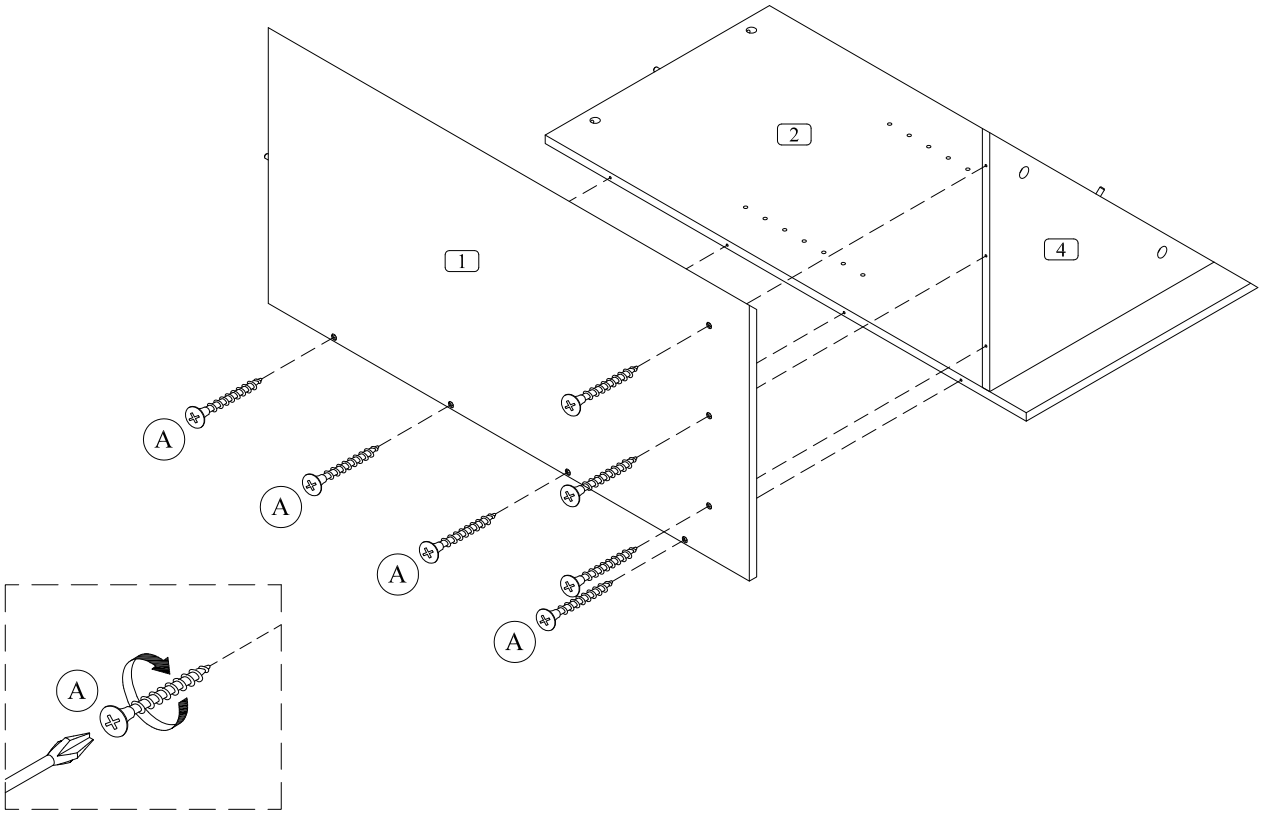

3

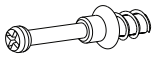
C = 2 x


D = 2 x

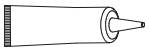
P

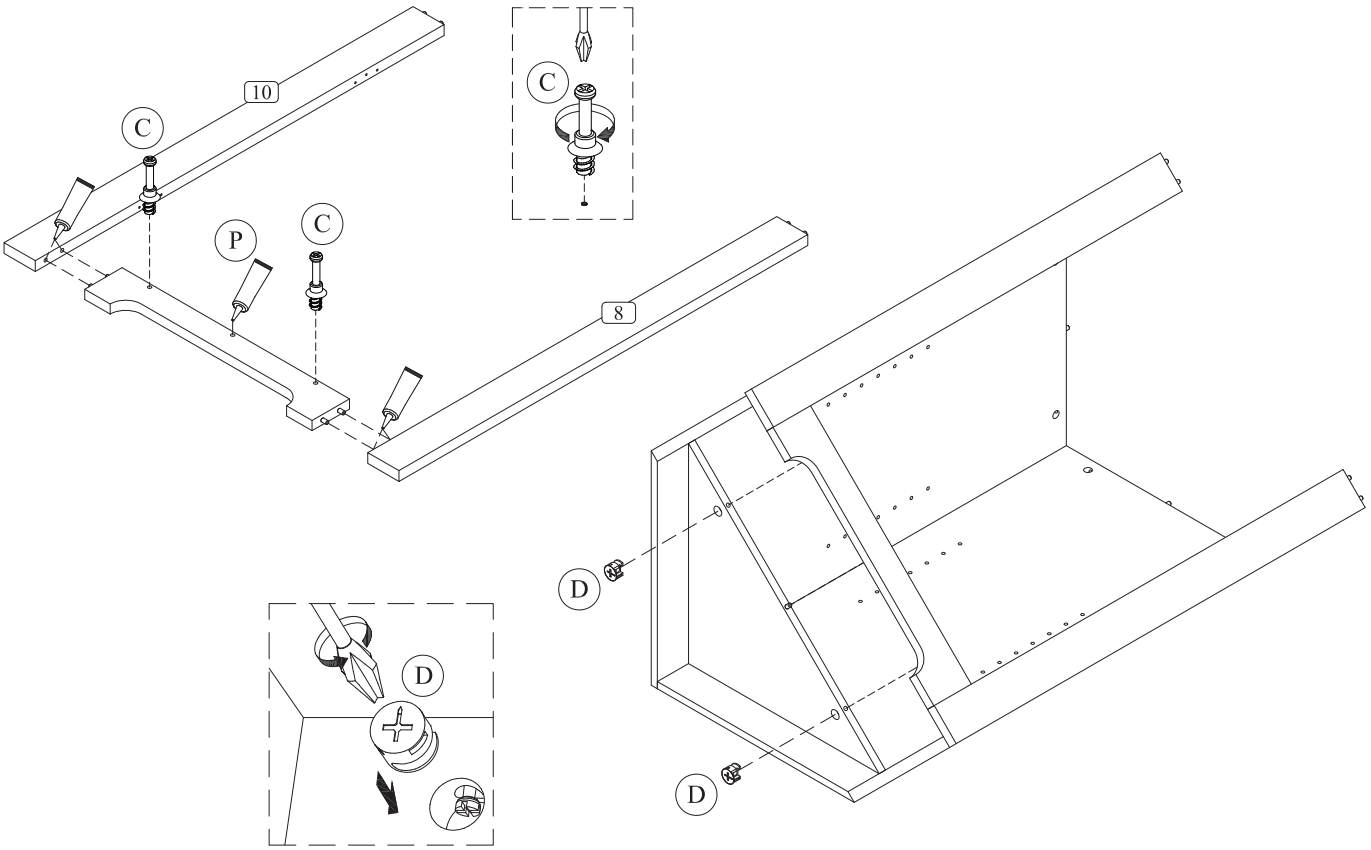

4

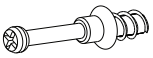
C = 4 x


I = 1 x


Q = 2 x


P

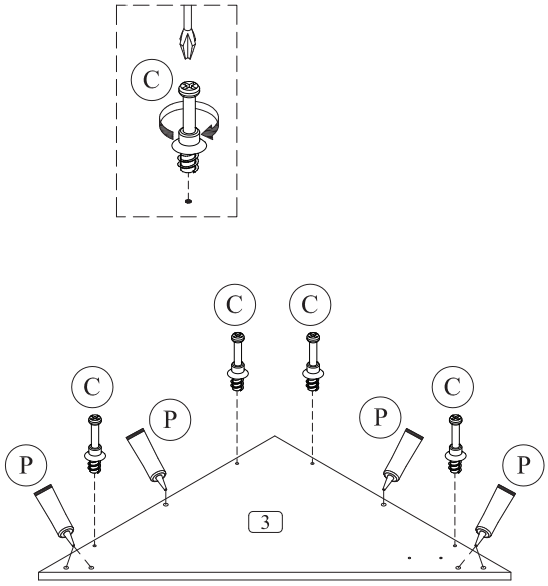

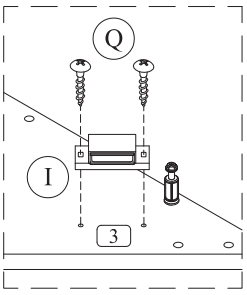

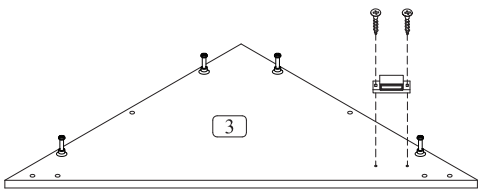

5



D = 4 x

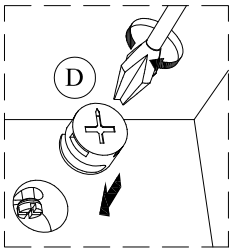

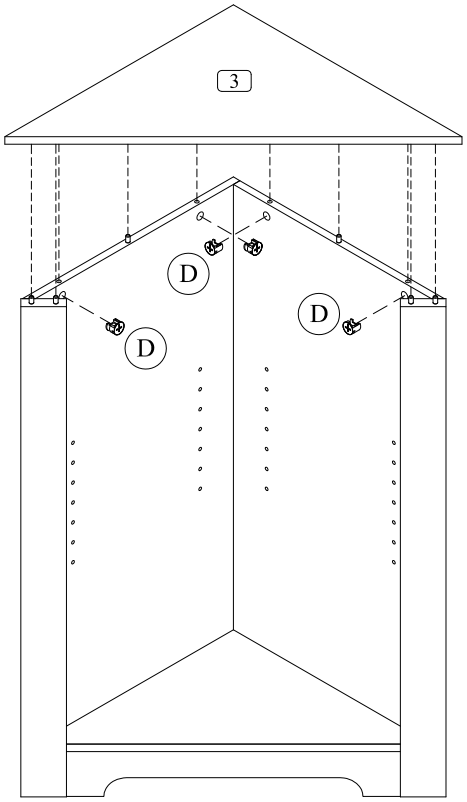

6



K = 4 x

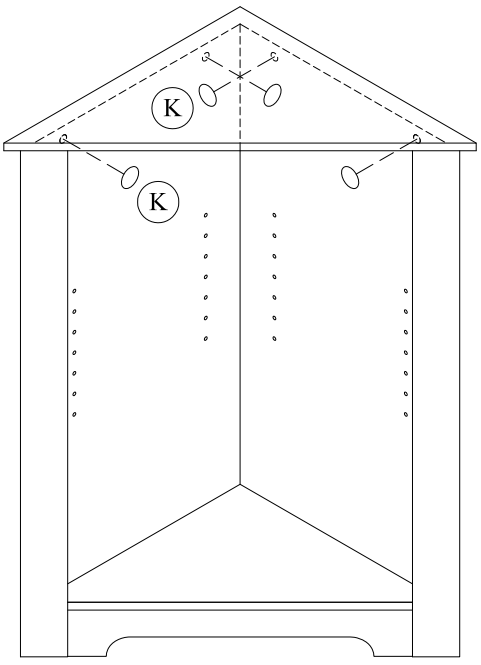

7

B = 4 x

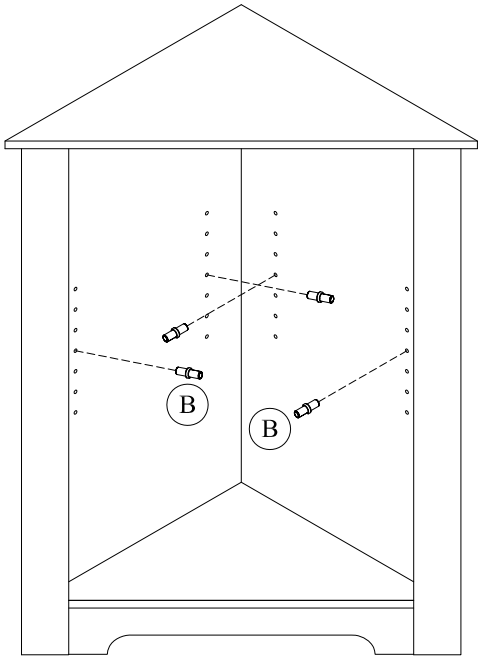

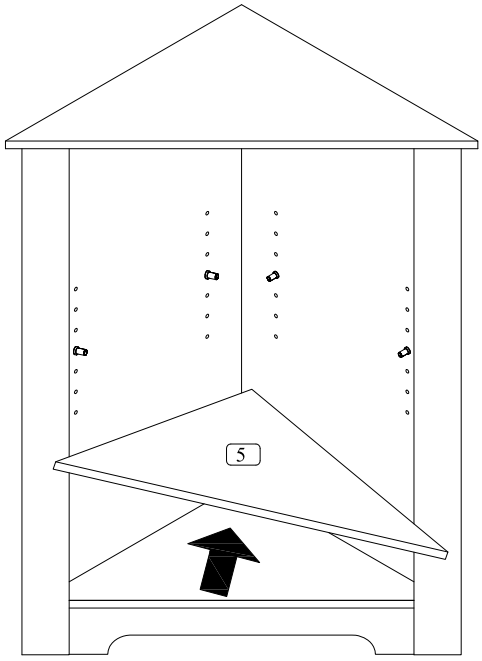

8

E = 6 x | F = 1 x | G = 1 x | H = 2 x | J = 1 x | L = 1 x

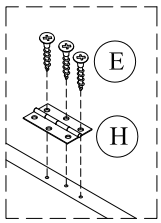

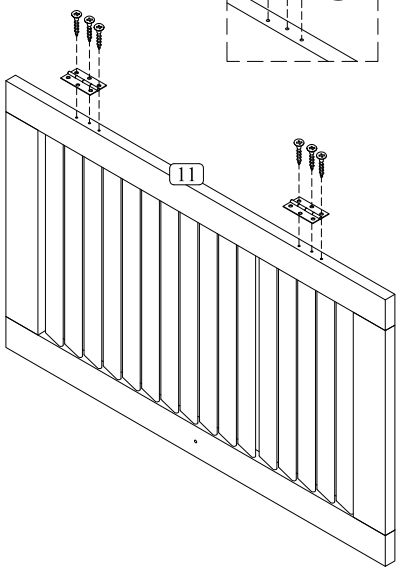

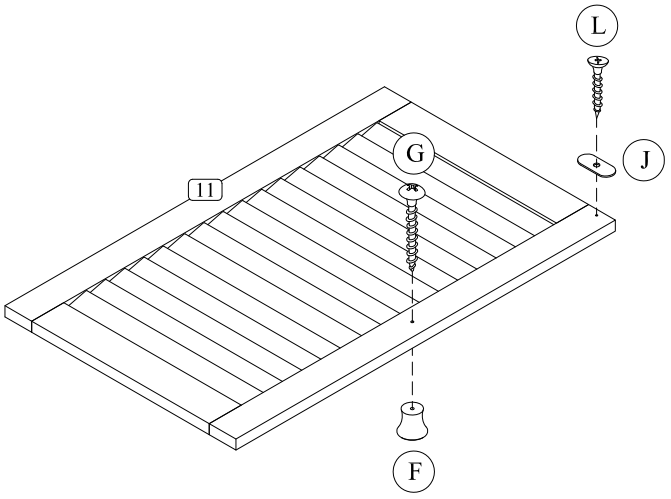

9

E = 6 x | M = 10 x | N = 1 x | O = 1 x

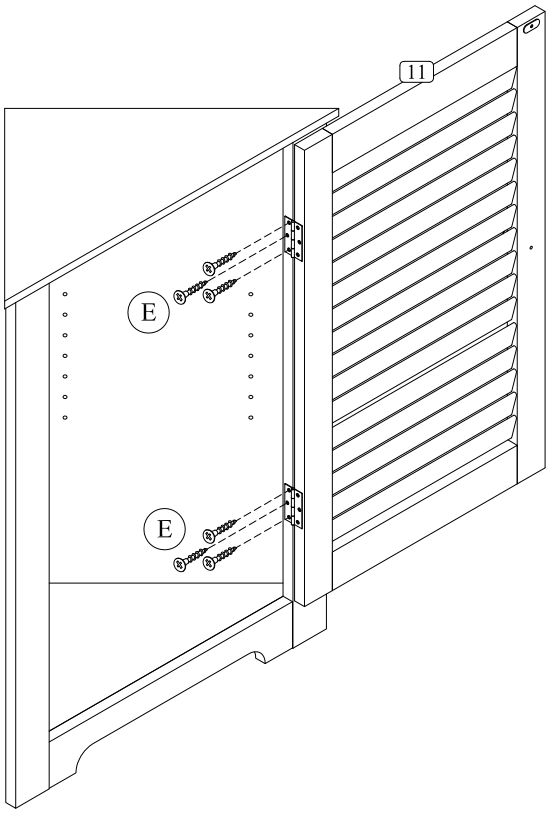

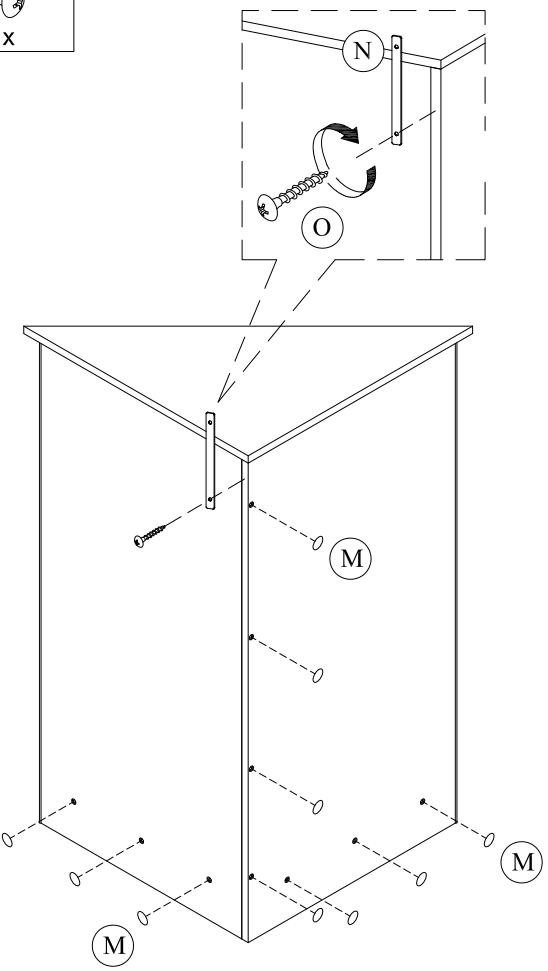

10

