Furinno®
Fits Space, Fits Budget

www.furinno.com

NEED HELP? For replacement requests or product inquiries, please contact our Customer Service Team by emailing us at **support@furinno.com**. Thank you for selecting Furinno!

FR21022

Furinno Wall Mount Media Console, 72”

Position 1:

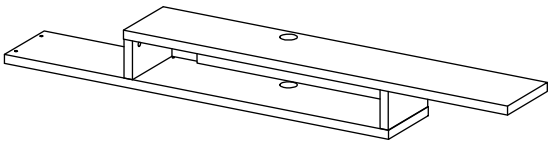

Position 2:

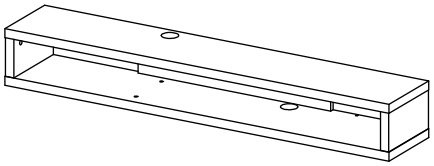

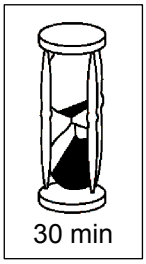

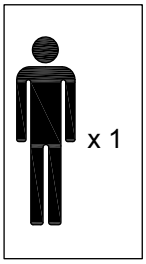

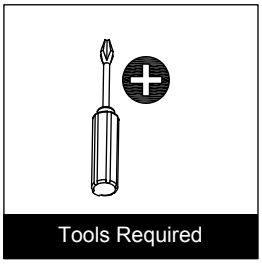

USEFUL HINTS BEFORE YOU START:

1. Read each step carefully before starting.
2. It is important that each step is performed in correct order to avoid difficulties.
3. Identify, sort and count the parts before assembly.
4. Assemble your furniture on packaging cardboard to prevent scratch or damage.
5. Clean the product with mild cleanser using soft damped cloth. Do not use harsh or abrasive cleanser.
6. Using uncompatible hardware might cause damage to product.

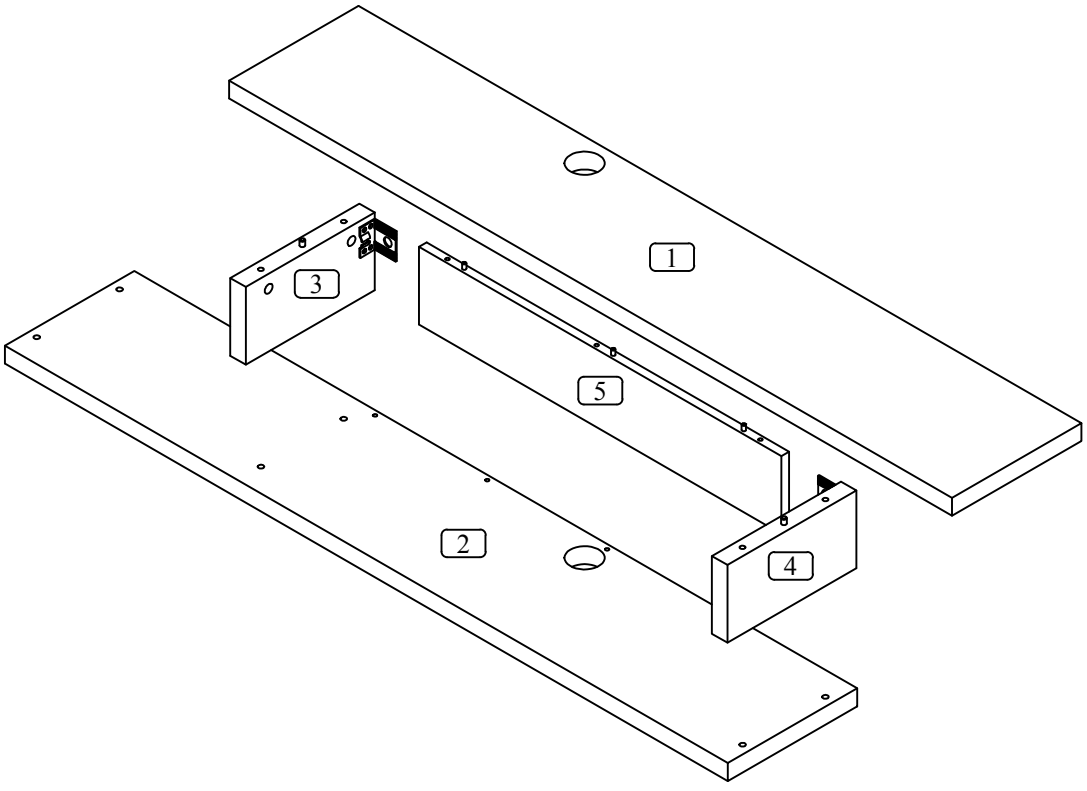

A 4 x  ø15x12 mm	B 4 x 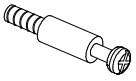 ø7x35 mm	C 3 x  ø15x10 mm	D 3 x 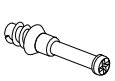 ø8.5x32 mm	E 4 x 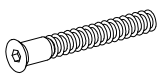 M7 x 50 mm	F 2 x  ø7.2x47 mm	G 2 x 
H 2 x 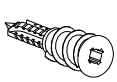 ø13x40 mm	I 2 x 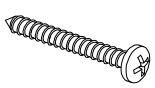 ø8x1 1/4" mm	J 4 x  ø8x5/8" mm	K 2 x 	L 2 x 	M 2 x  ø68x25 mm	N 1 x 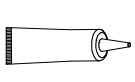	O 1 x 

1


G = 2 x


J = 4 x


M = 1 x

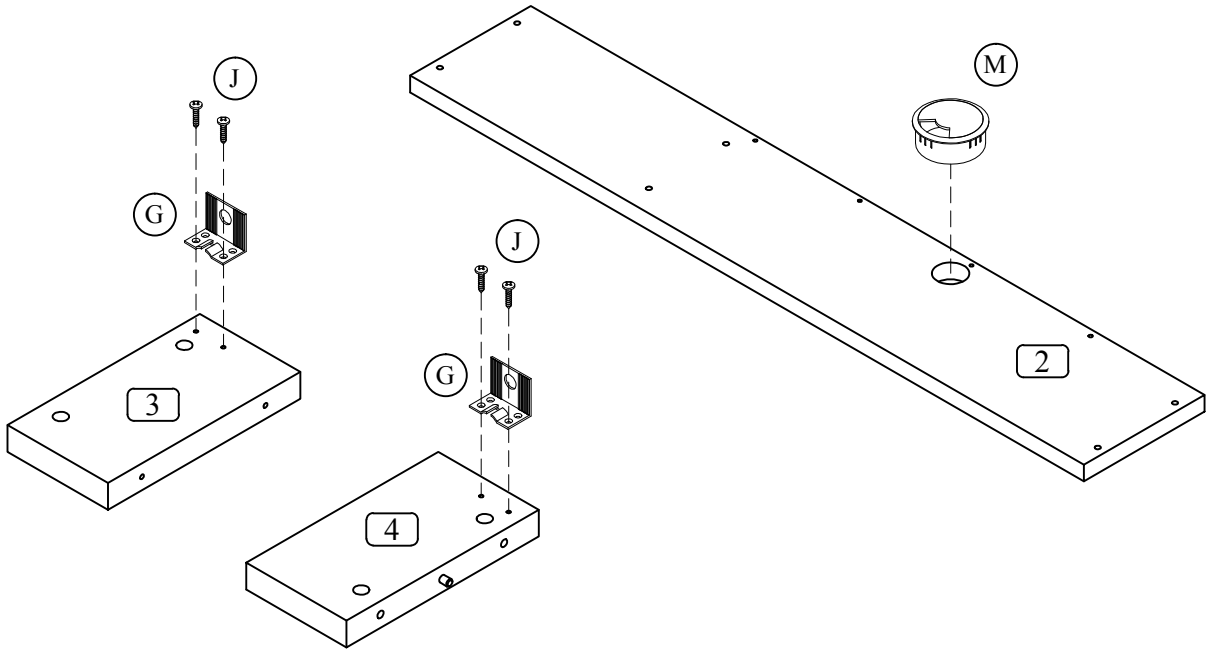

2


B = 4 x


D = 3 x

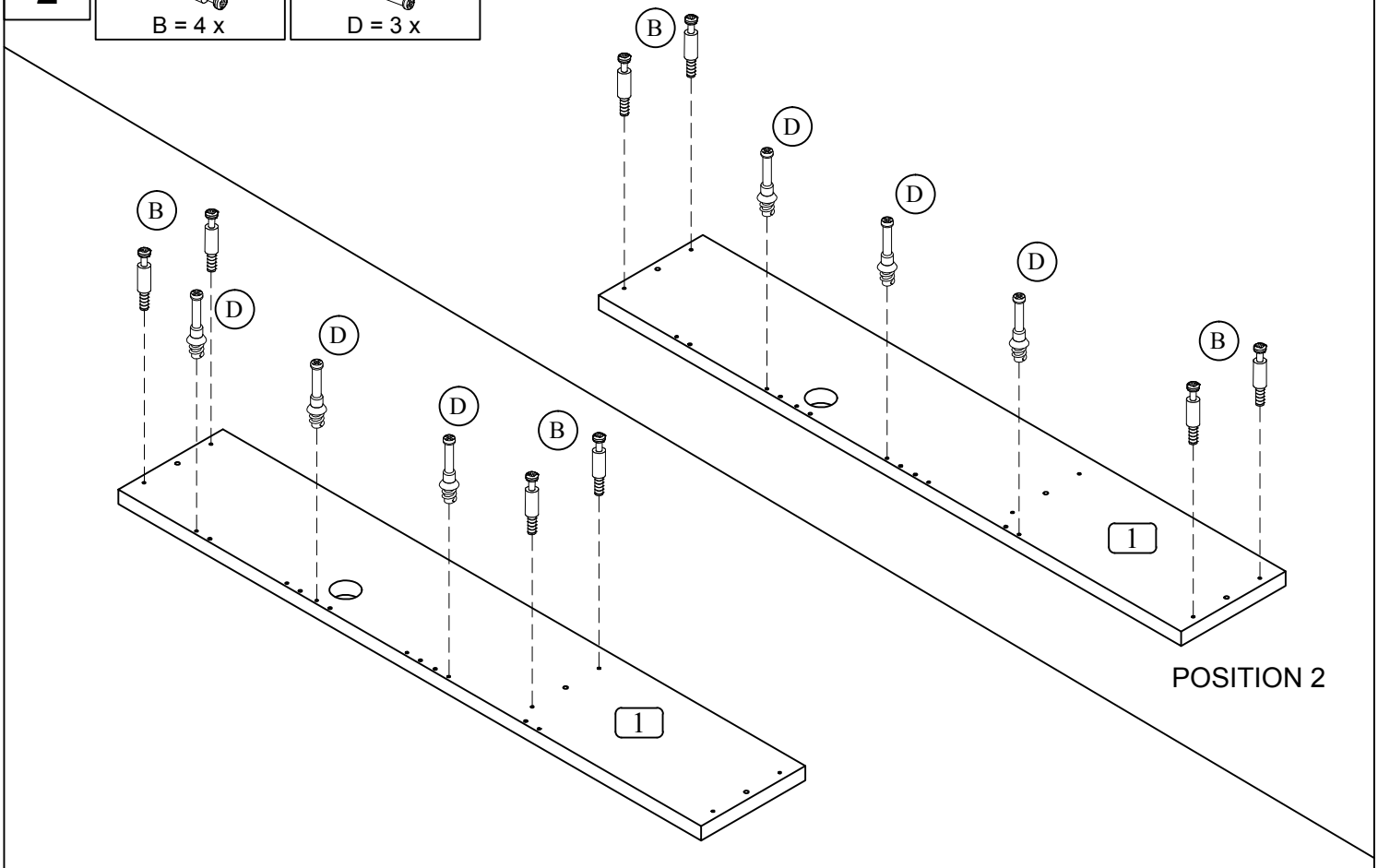

3


A = 4 x

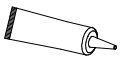
N = 1 x

POSITION 1

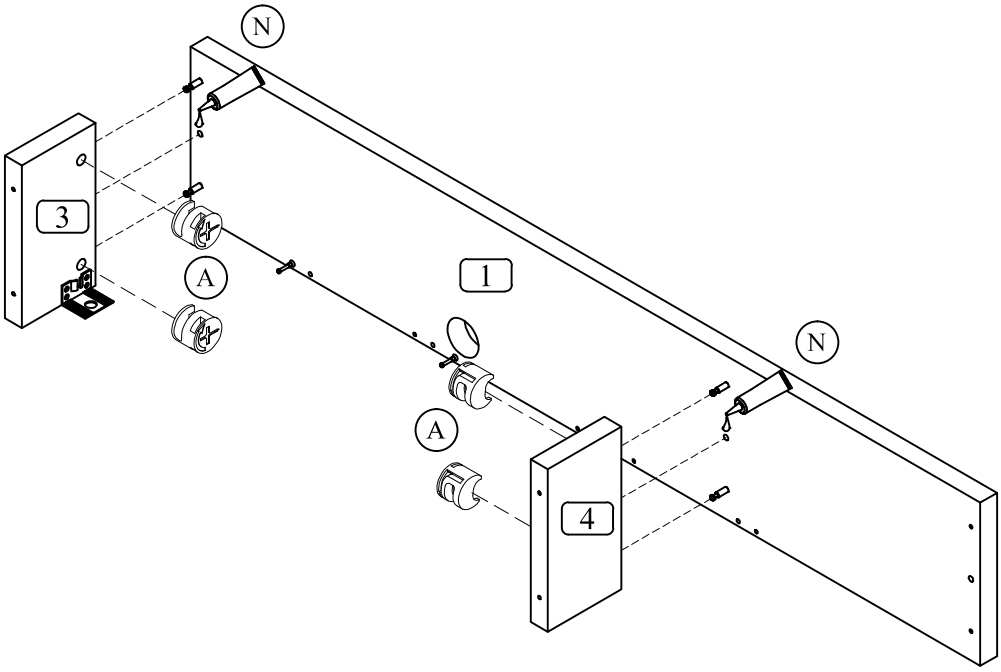

POSITION 2

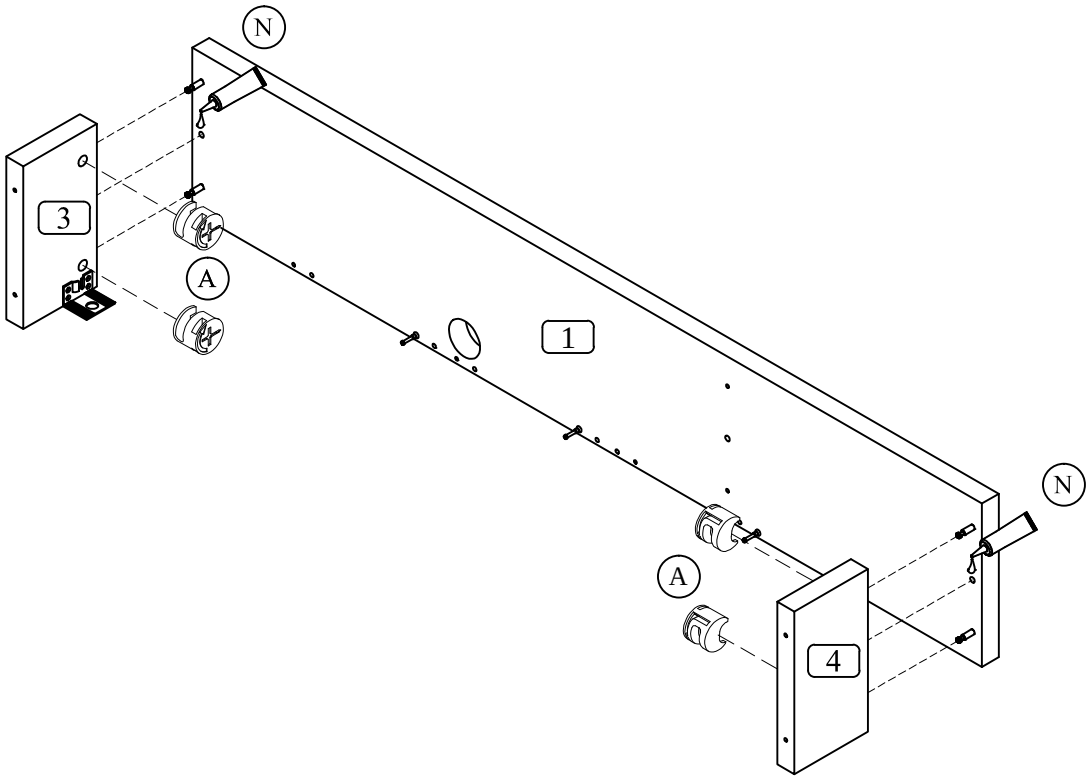

4


C = 3 x

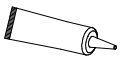
N = 1 x

POSITION 1

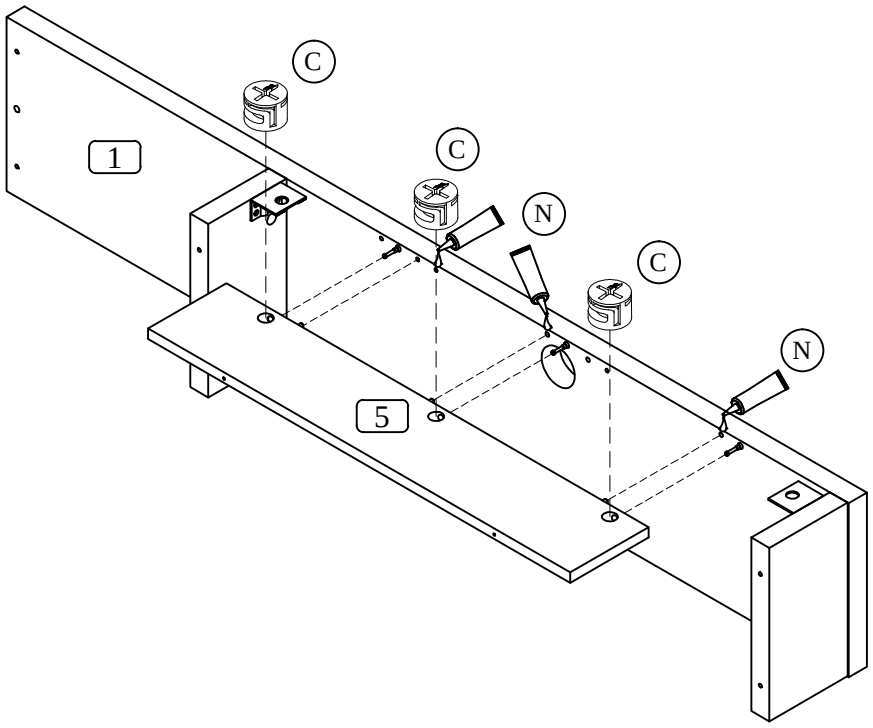

POSITION 2

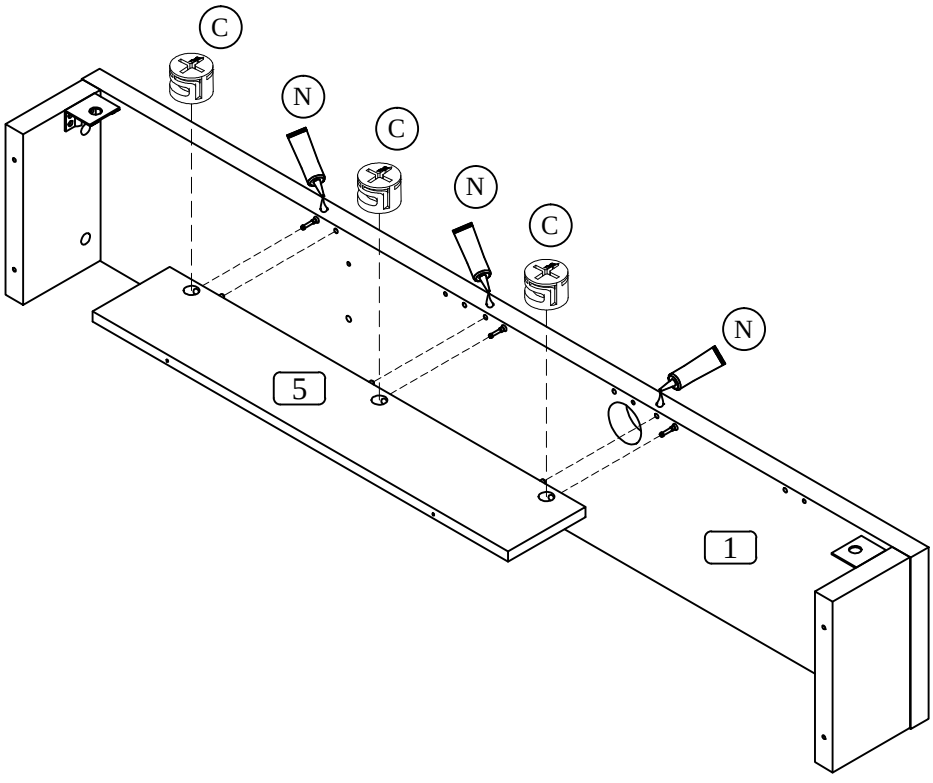

5


E = 4 x


F = 2 x


O = 1 x

POSITION 1

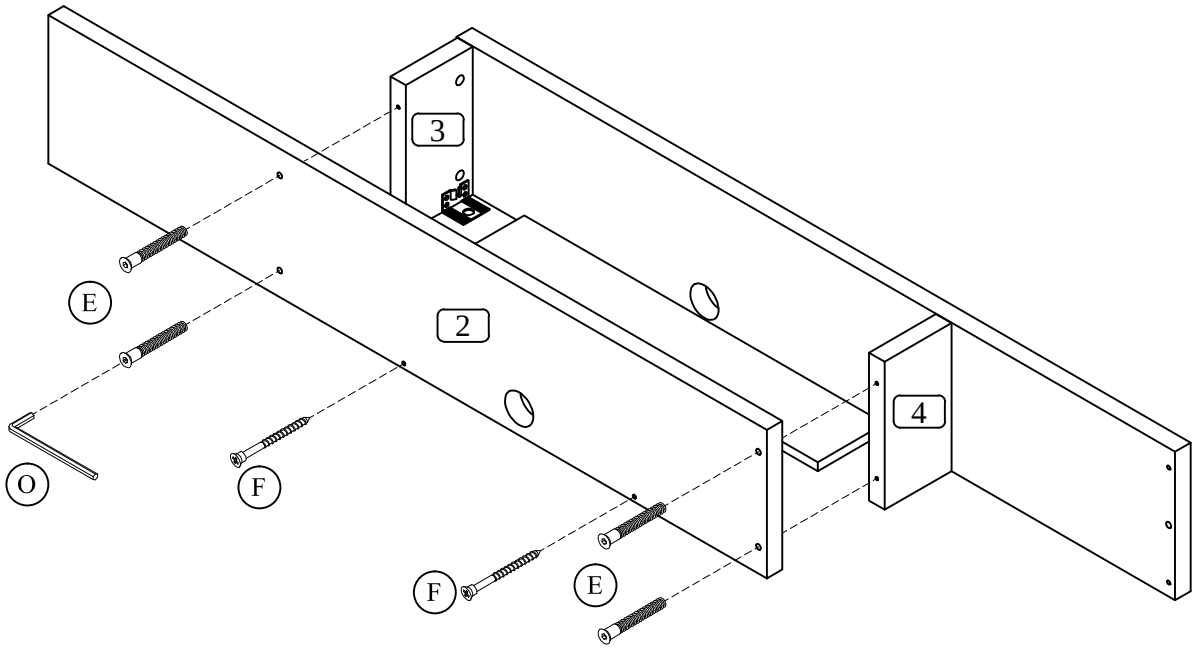

POSITION 2

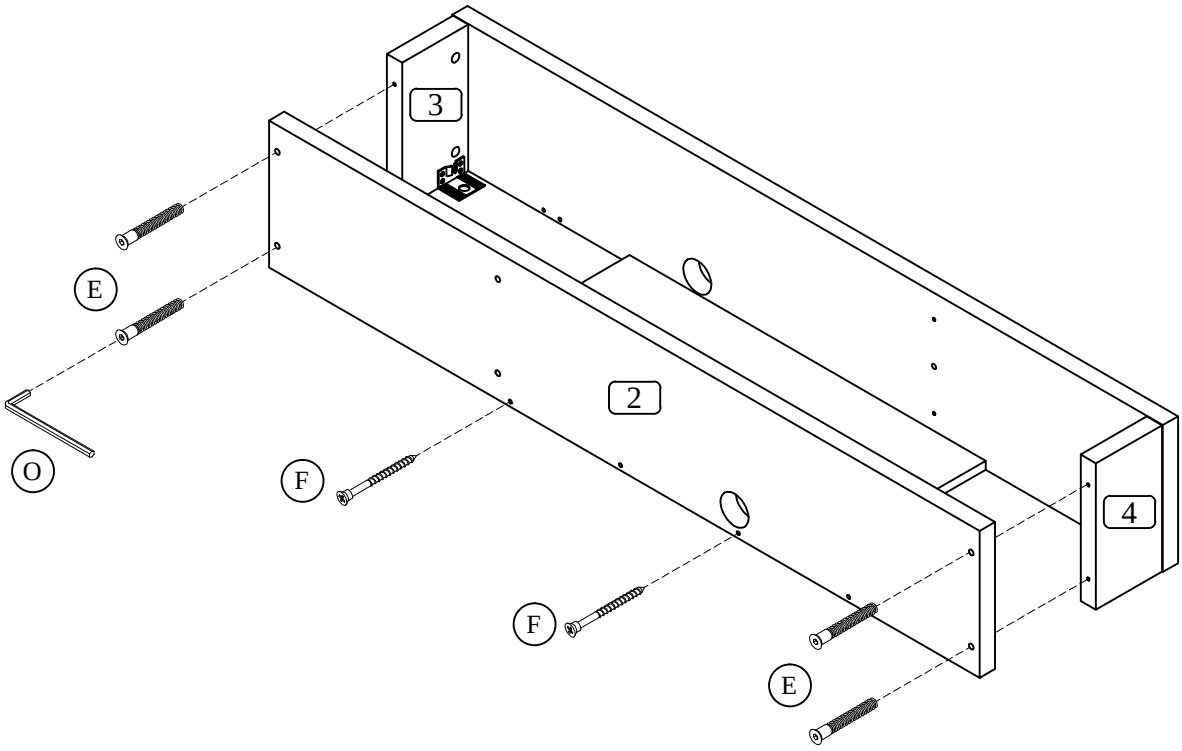

6



M = 1 x

POSITION 1

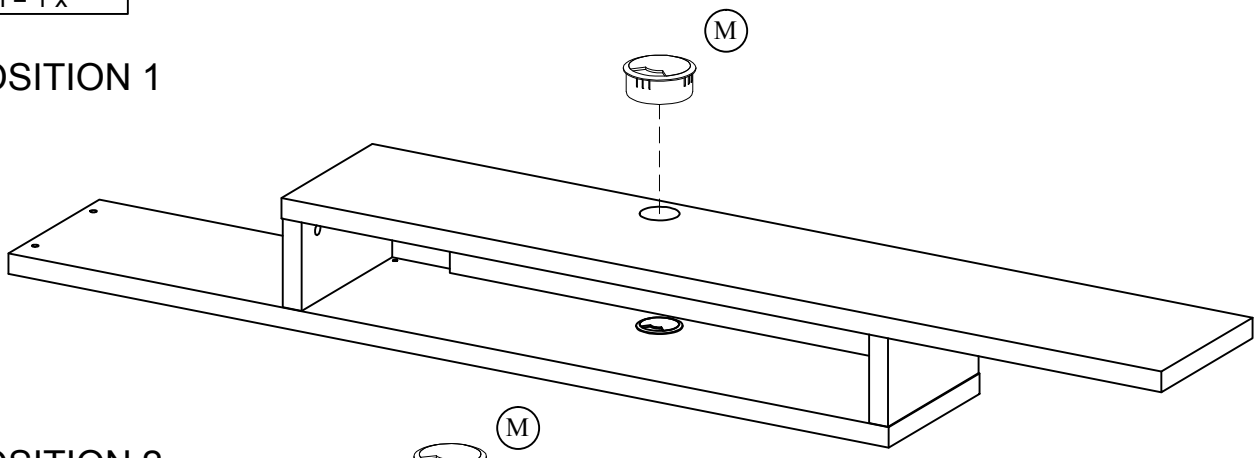

POSITION 2

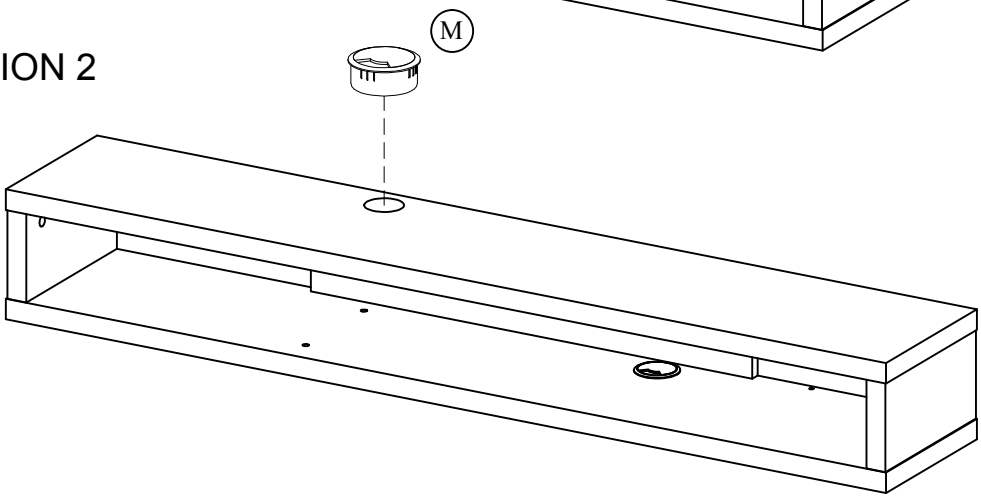

7



H = 2 x



I = 2 x

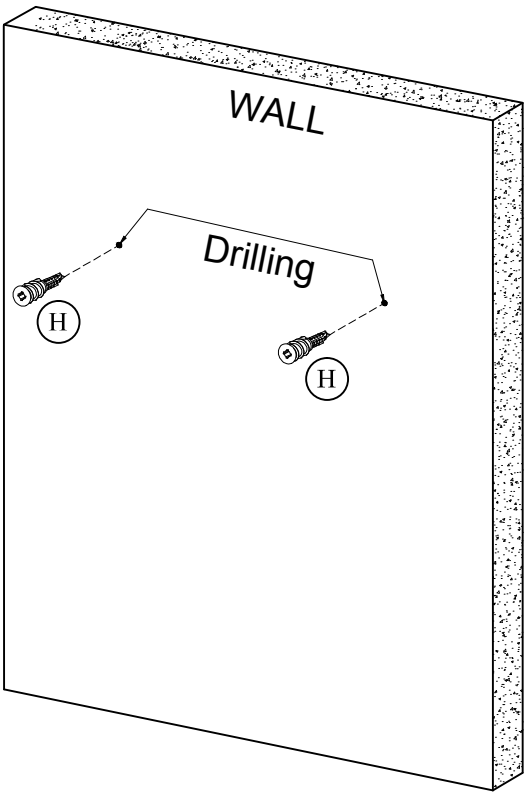

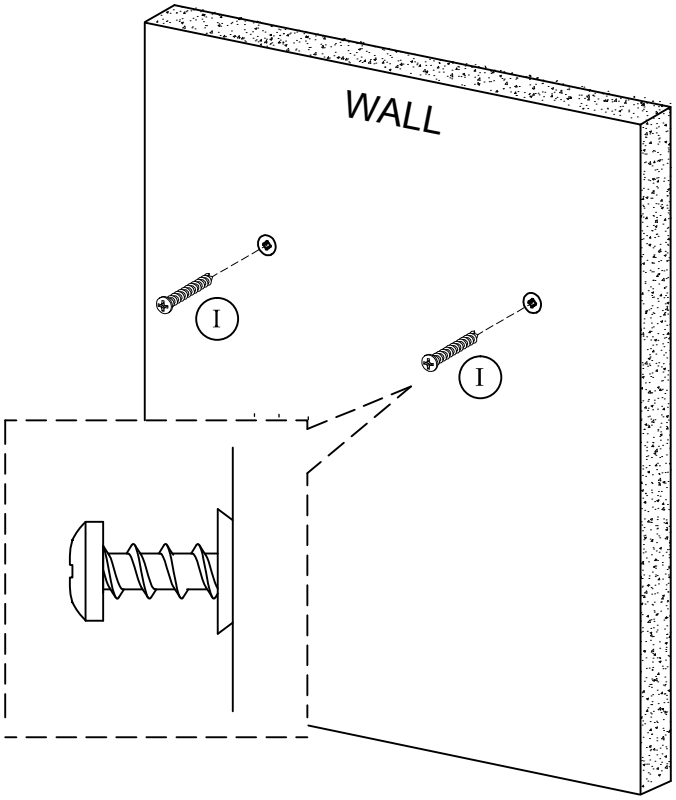

8


K = 2 x


L = 2 x

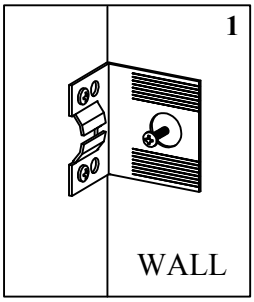

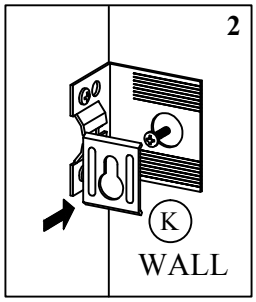

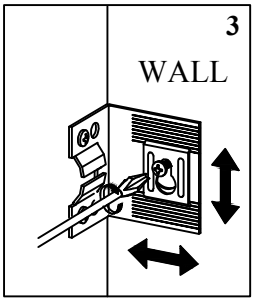

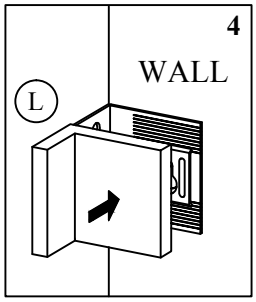

WALL

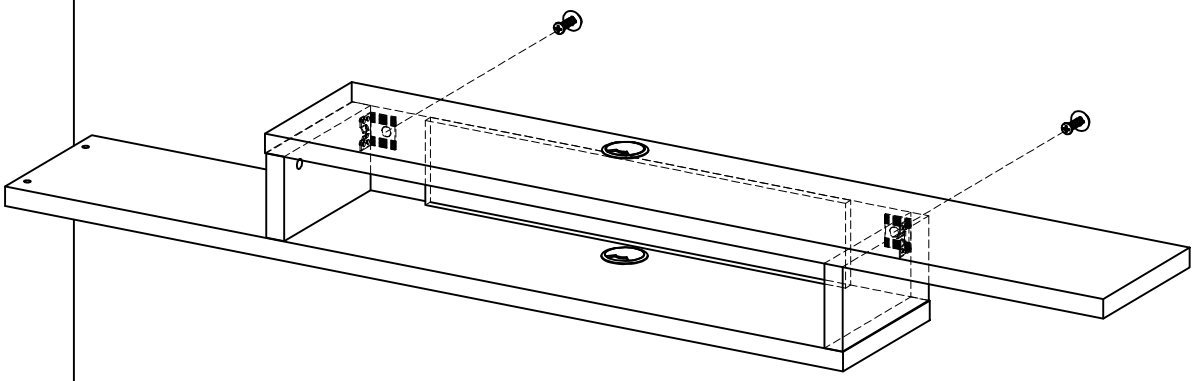

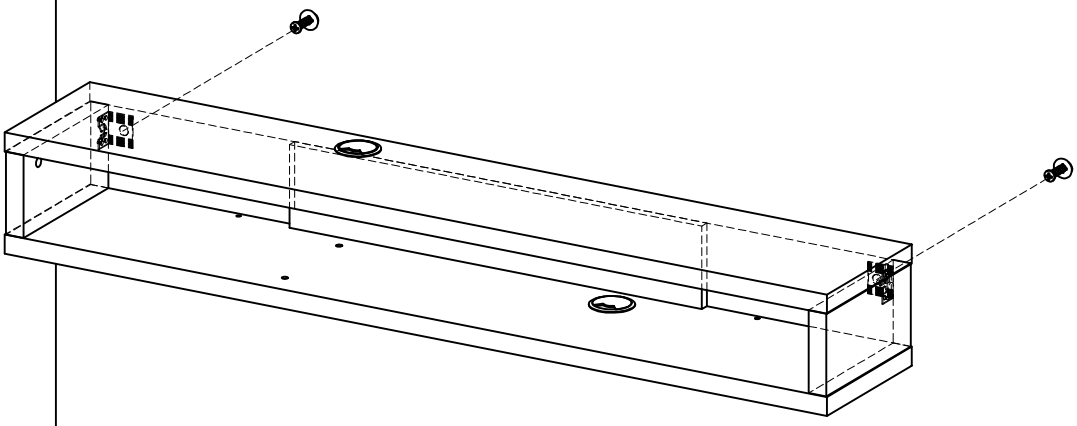

IMPORTANT: This unit has been designed to support the maximum weight capacity **33 lbs**.