STEP 5

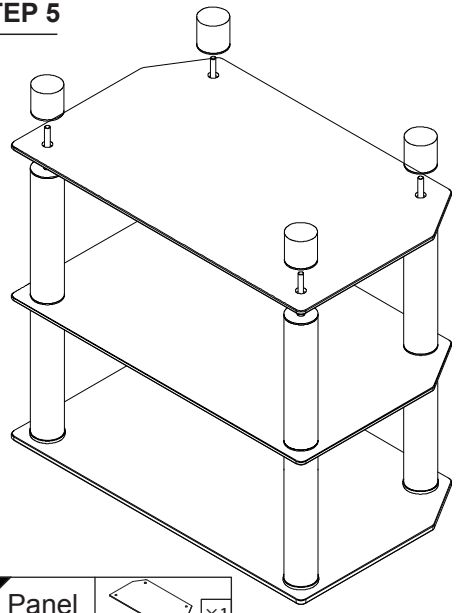

B	Panel	×1
E	Foot	×4

STEP 6

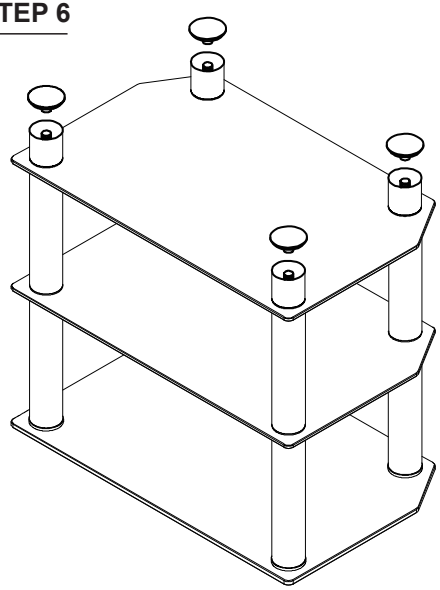

2	Cap	×4

STEP 7

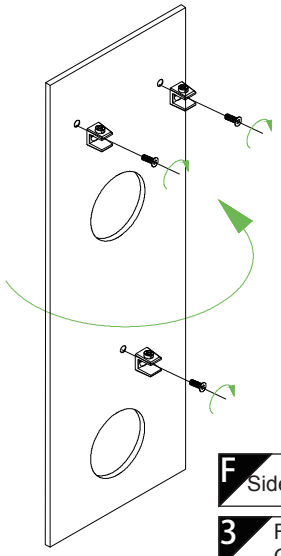

F	Side Panel	×1
3	Fixed Clamp	×3
4	Nut	×3

STEP 8

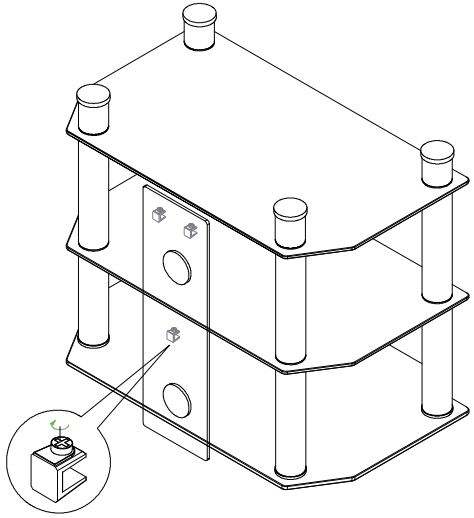

Furinno®
Fits Space. Fits Budget

Assembly Instruction

Furinno Silk Screen Glass TV Stand

MODEL : **FRL16M3**

Approx. 15 minutes

Recomm. 1 Person

Tools Required

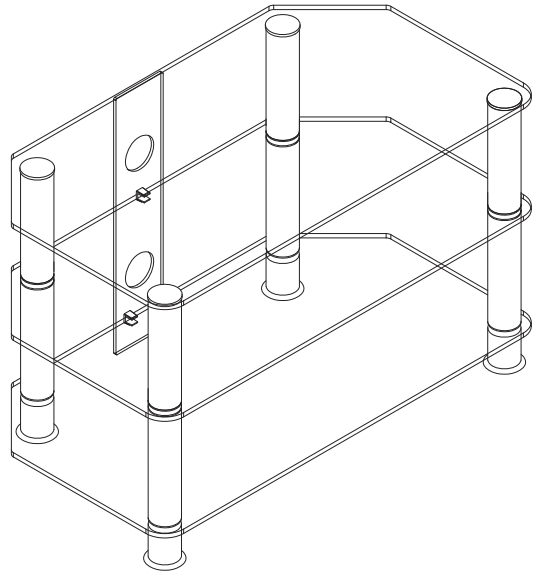

Customer Support

NEED HELP? For replacement requests or product inquiries, please contact our Customer Service Team by emailing us at **support@furinno.com**. Thank you for selecting Furinno!

www.furinno.com

FRL16M320181126

No	Hardware List	Qty
①	Long Bolt	4pcs
②	Cap	4pcs
③	Fixed Clamp	3pcs
④	Nut	3pcs

No	Parts List	Qty
A	Top Plate	1pc
B	Panel	2pcs
C	Under-pillar	4pcs
D	Top-pillar	4pcs
E	Foot	4pcs
F	Side Panel	1pc

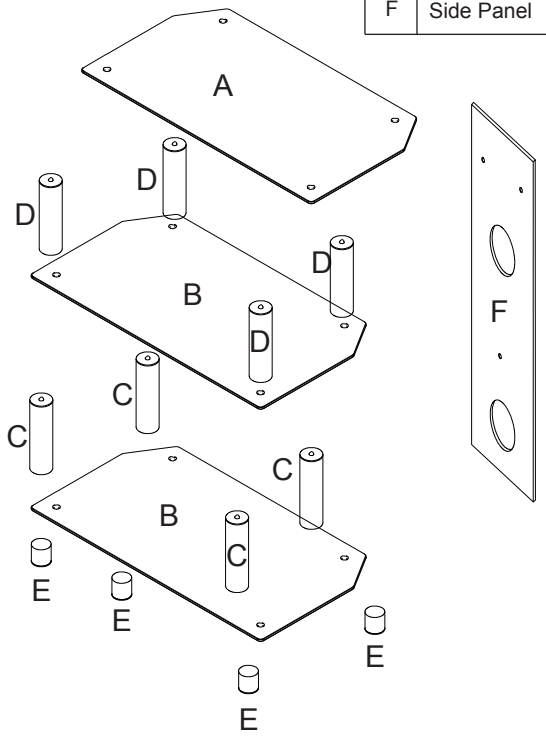

USEFUL HINTS BEFORE YOU START:

1. Read each step carefully before starting.
2. It is important that each step is performed in correct order to avoid difficulties.
3. Identify, sort and count the parts before assembly.
4. Assemble your furniture on packaging cardboard to prevent scratch or damage.
5. Clean the product with mild cleanser using soft damped cloth. Do not use harsh or abrasive cleanser.
6. Using uncompatible hardware might cause damage to product.

STEP 1

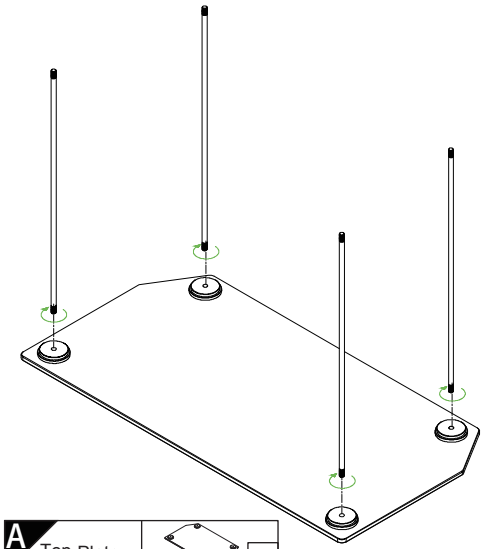

A Top Plate ×1

1 Long Bolt ×4

STEP 2

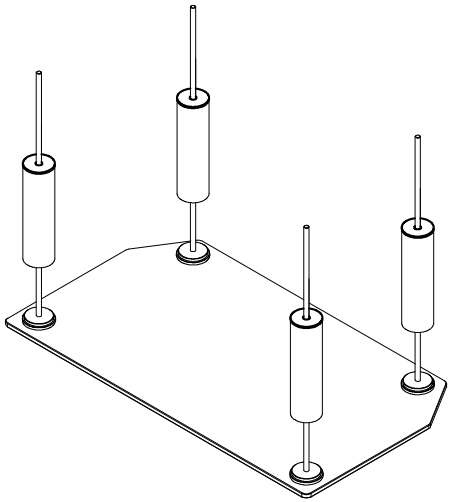

D Top-pillar ×4

STEP 3

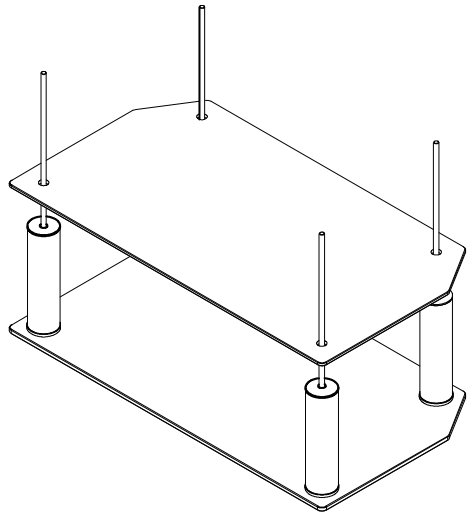

B Panel ×1

STEP 4

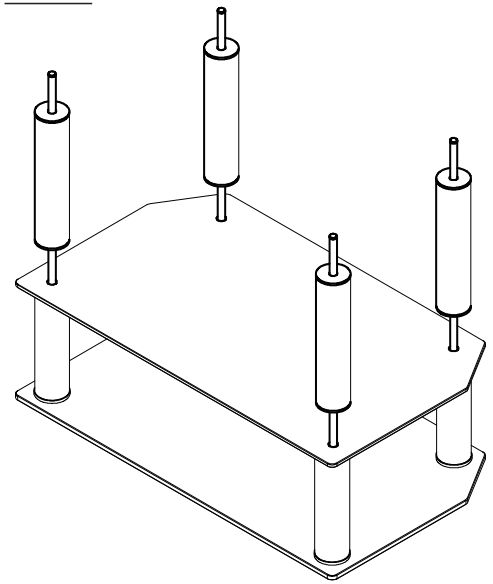

C Under-pillar ×4