Furinno®
Fits Space. Fits Budget

www.furinno.com

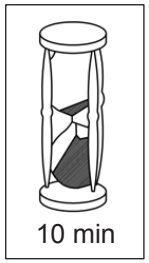

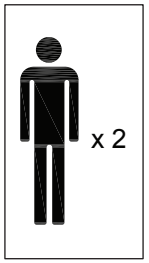

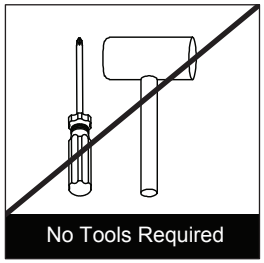

USEFUL HINTS BEFORE YOU START:

1. Read each step carefully before starting.
2. It is important that each step is performed in correct order to avoid difficulties.
3. Identify, sort and count the parts before assembly.
4. Assemble the product on packaging cardboard to prevent scratch or damage.
5. Using uncompatible hardware might cause damage to the product. DO NOT FULLY-TIGHTEN the nut until all nuts are ready assembled.

IMPORTANT NOTES:

* This unit has been designed to support maximum loads:

  Loveseat: 550 lbs
  3-Seater Sofa: 700 lbs

  Exceeding these load limits could cause sagging, instability, product collapse, and/or serious injury.

* Keep all hardware parts out of reach of children.

NEED HELP? For replacement requests or product inquiries, please contact our Customer Service Team by emailing us at **support@furinno.com**. Thank you for selecting Furinno!

ASSEMBLY INSTRUCTIONS

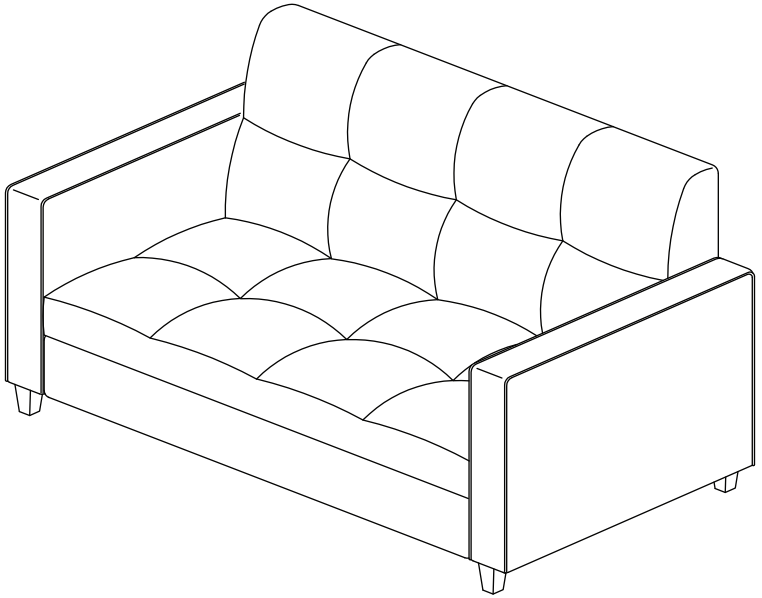

MODEL: FS193301

LOVESEAT

ASSEMBLY INSTRUCTION

NO	PART LIST	QTY
1	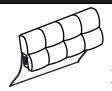 BACK REST	1PC
2	 LEFT SIDE PANEL (L)	1PC
3	 RIGHT SIDE PANEL (R)	1PC
4	 BOX SEAT	1PC
5	 LEG	4PCS

NOTE:
Some parts packed inside the compartment of the box seat.

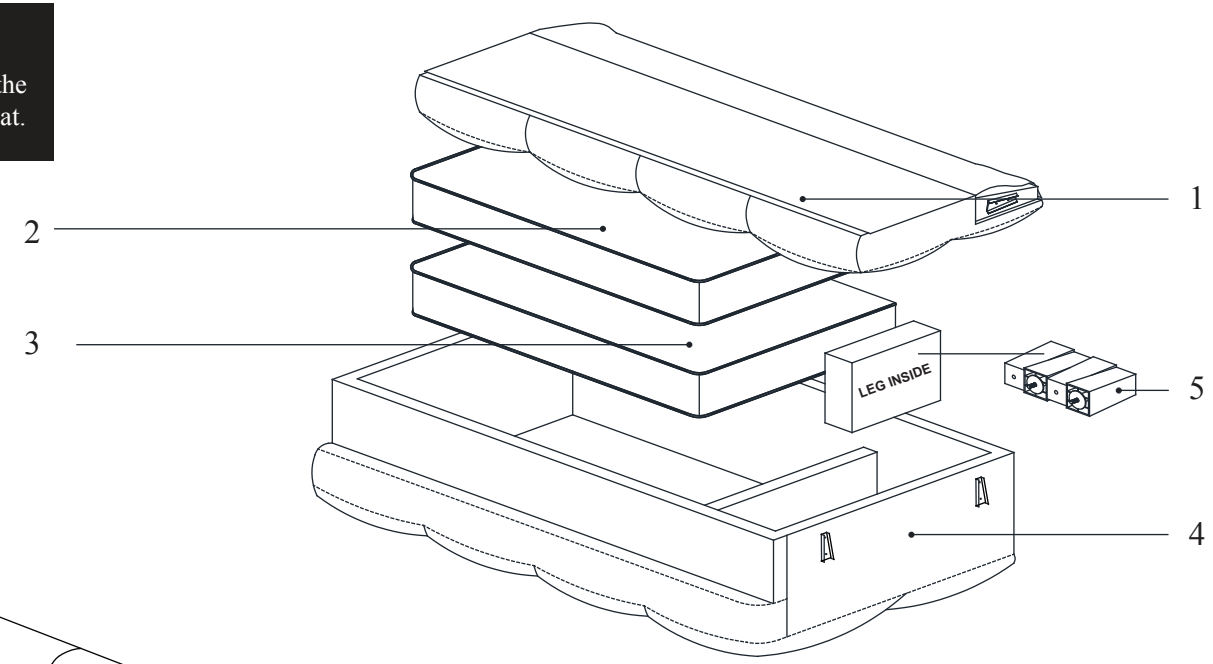

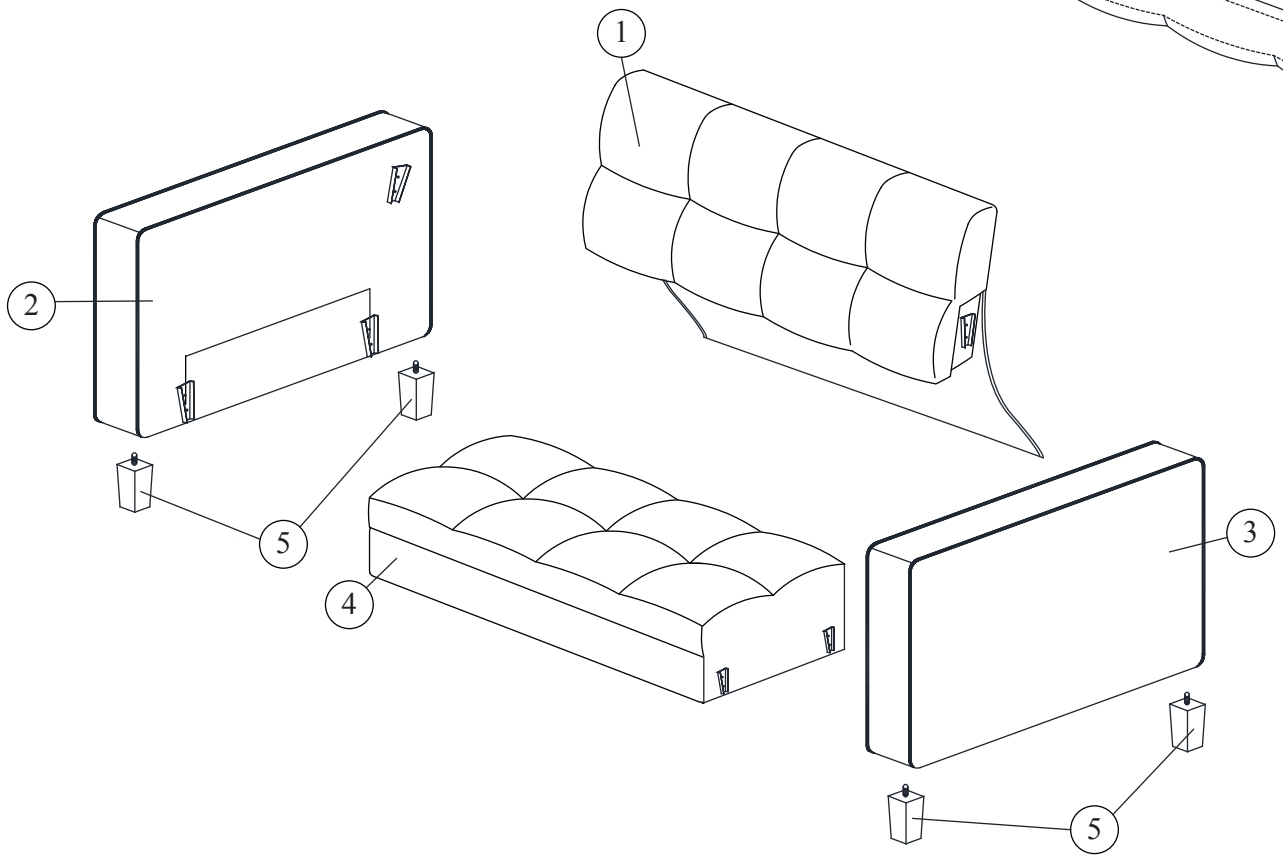

ASSEMBLY INSTRUCTION

STEP 1

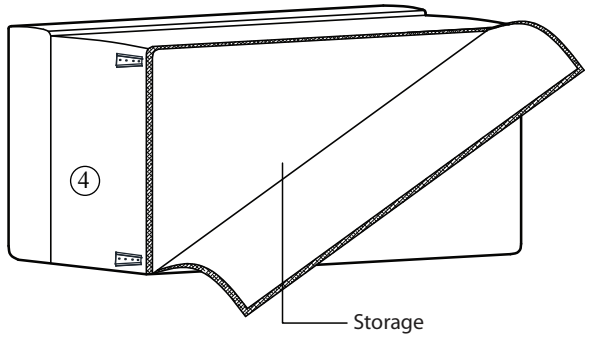

STEP 2

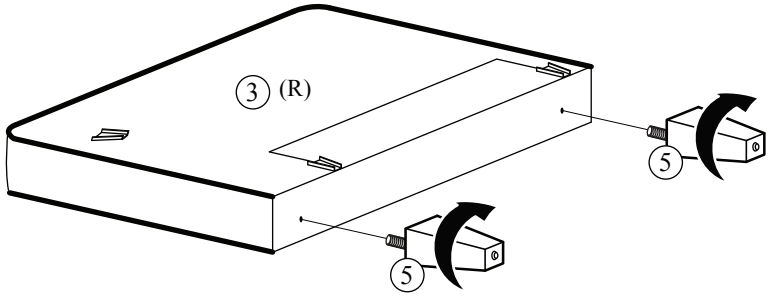

Note: Repeat step for Left Side Panel (L).

STEP 3

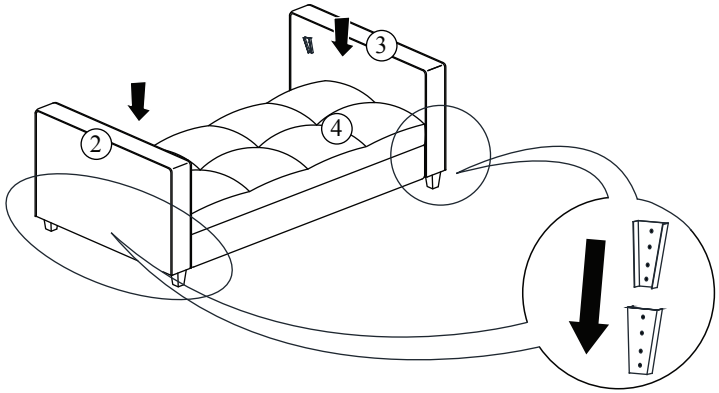

STEP 4

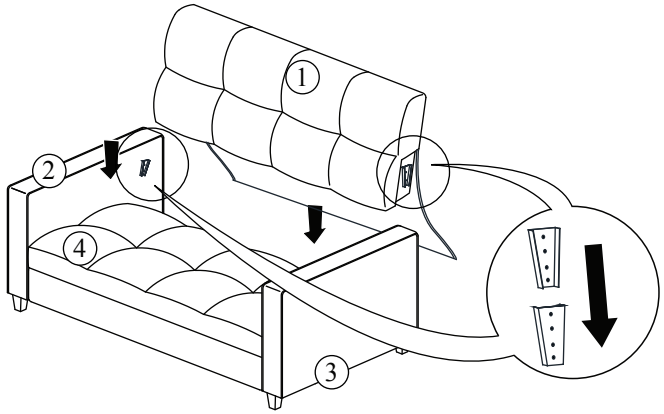

STEP 5

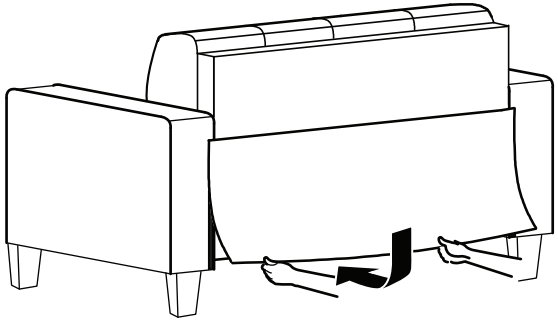

STEP 6

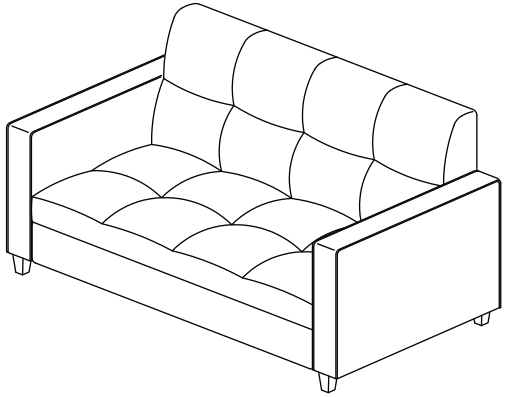

ASSEMBLY COMPLETED