FVR7231

Furinno TV/ Entertainment Center

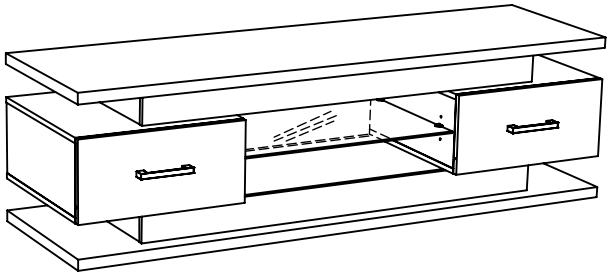

www.furinno.com

NEED HELP? For replacement requests or product inquiries, please contact our Customer Service Team by emailing us at **support@furinno.com**. Thank you for selecting Furinno!

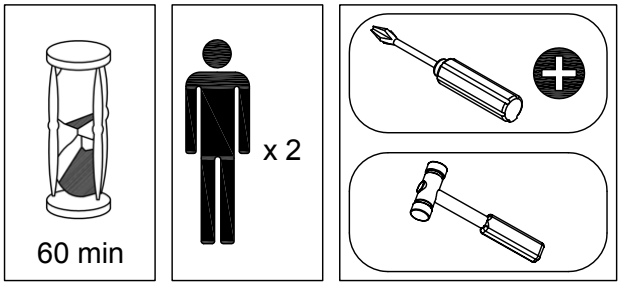

USEFUL HINTS BEFORE YOU START:

1. Read each step carefully before starting.
2. It is important that each step is performed in correct order to avoid difficulties.
3. Identify, sort and count the parts before assembly.
4. Assemble your furniture on packaging cardboard to prevent scratch or damage.
5. Clean the product with mild cleanser using soft damped cloth.
   Do not use harsh or abrasive cleanser.
6. Using uncompatible hardware might cause damage to product.

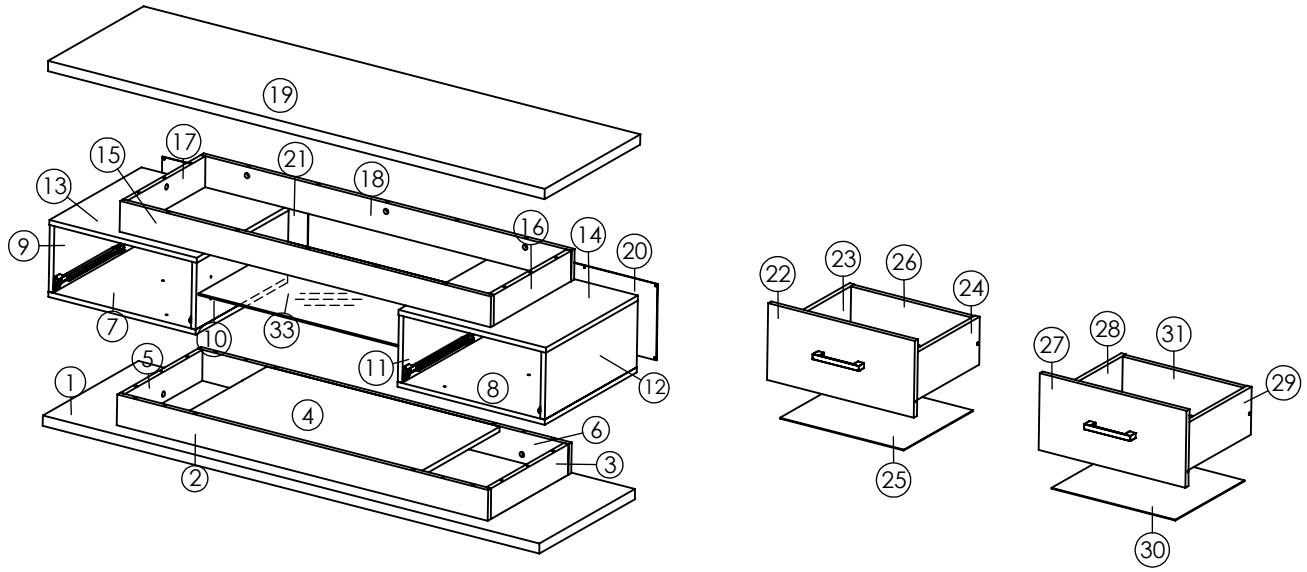

Ø15x12 MM Ax42	Ø6x32 MM Bx42	Ø18x5 MM Cx42	Ø8x32 MM Dx88	21x20 MM Ex4	149x27x15 MM Fx2	L=350MM Gx2
L=350MM Hx2	L=350MM Ix2	L=350MM Jx2	Ø11x46 MM Kx12	Ø14.5x19.5 MM Lx6	Ø7x32 MM Mx4	Ø6x13 MM Nx32

1

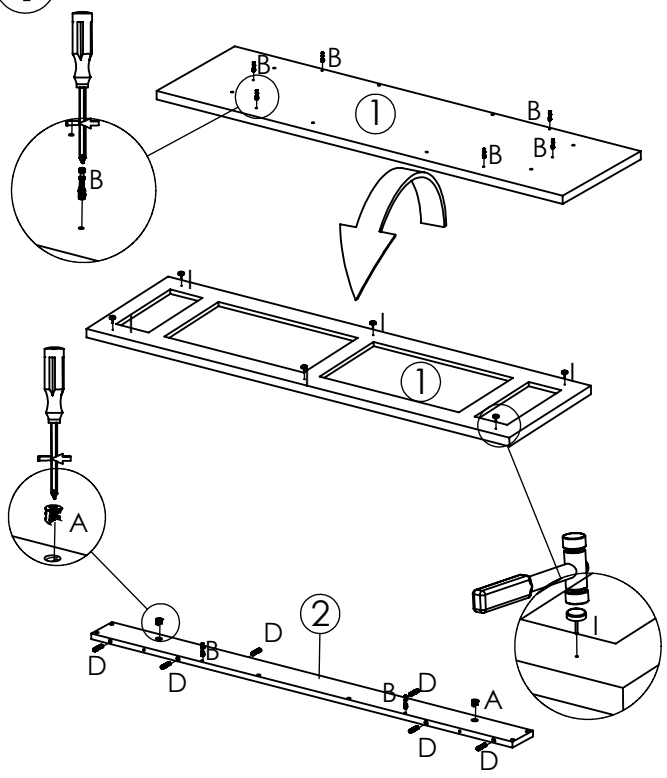

Ø15x12 MM	Ø6x32 MM	Ø8x32 MM	Ø14.5x19.5 MM
Ax2	Bx8	Dx6	Lx6

2

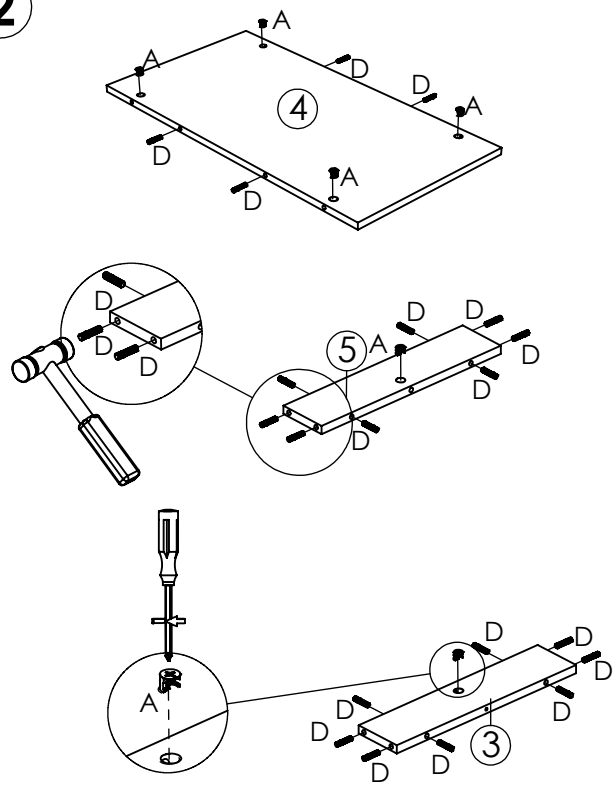

Ø15x12 MM	Ø8x32 MM
Ax6	Dx20

3

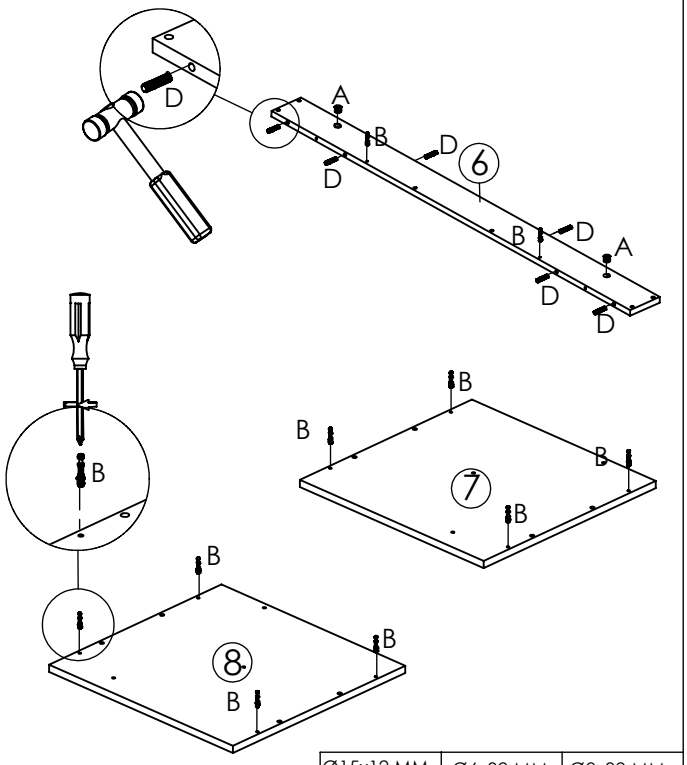

Ø15x12 MM	Ø6x32 MM	Ø8x32 MM
Ax2	Bx10	Dx6

4

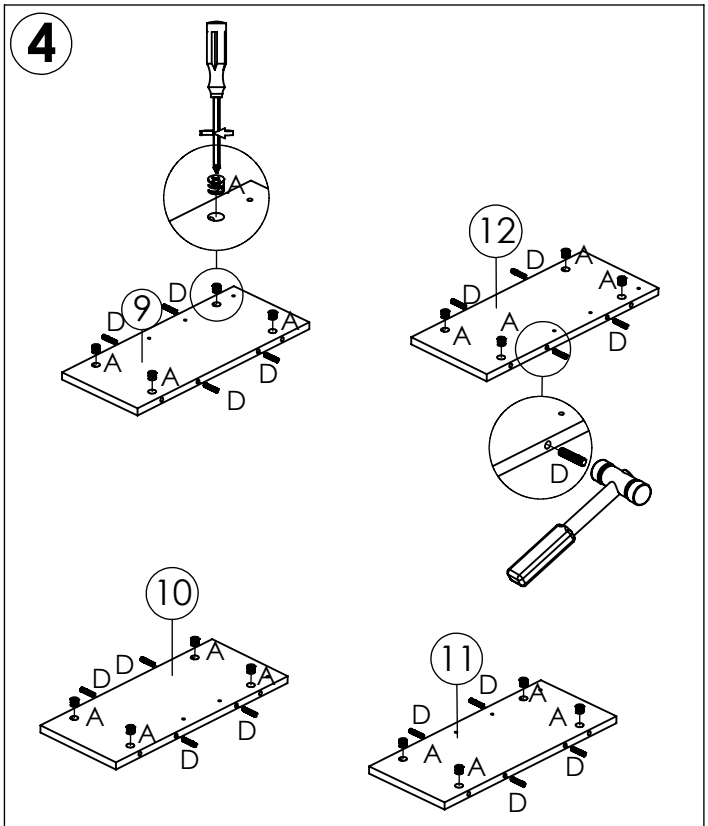

Ø15x12 MM	Ø8x32 MM
Ax16	Dx16

5

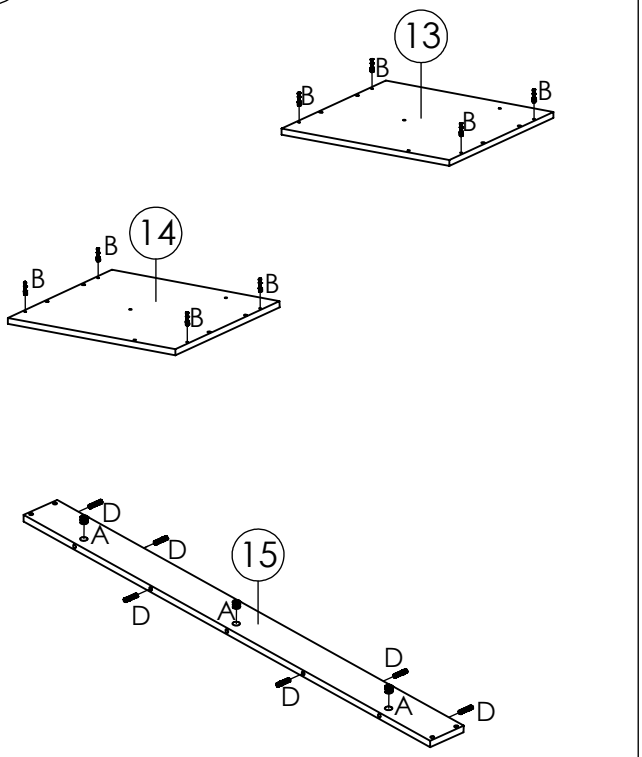

Ø15x12 MM	Ø6x32 MM	Ø8x32 MM
Ax3	Bx8	Dx6

6

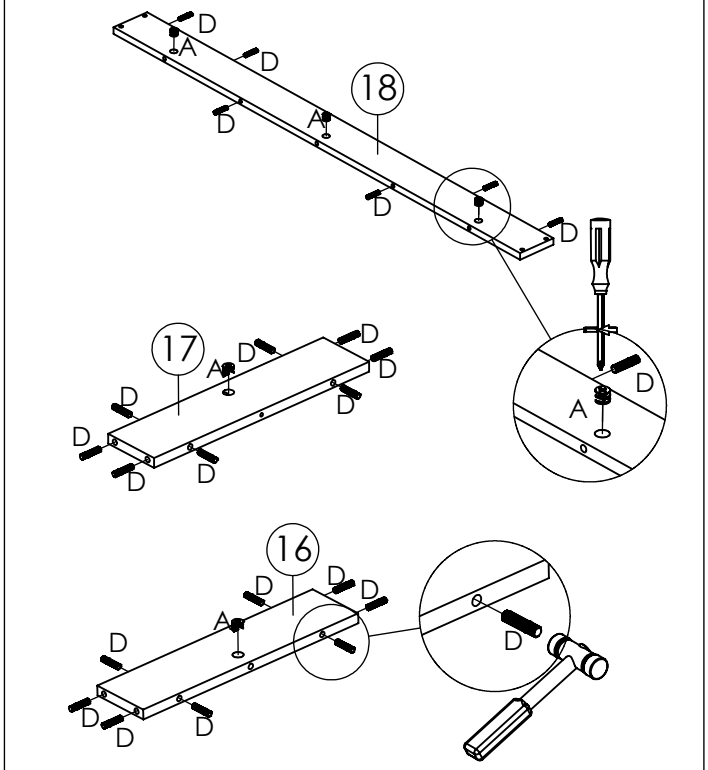

Ø15x12 MM	Ø8x32 MM
Ax5	Dx22

7

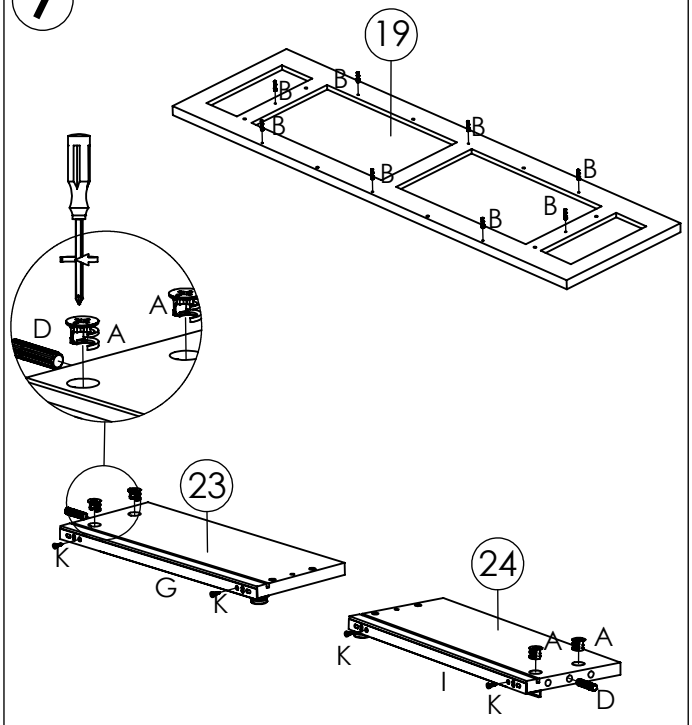

Ø15x12 MM	Ø6x32 MM	Ø8x32 MM	L=350MM	L=350MM	Ø6x13 MM
Ax4	Bx8	Dx2	Gx1	Ix1	Nx4

8

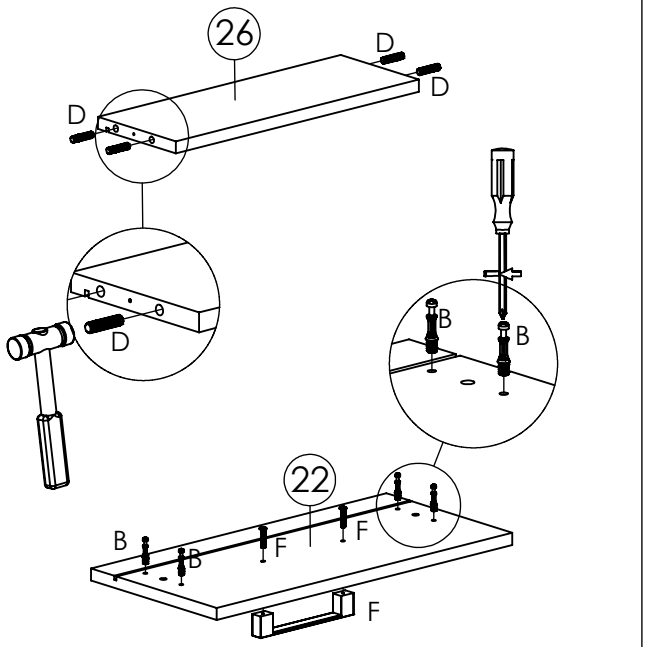

Ø6x32 MM	Ø8x32 MM	149x27x15 MM
Bx4	Dx4	Fx1

9

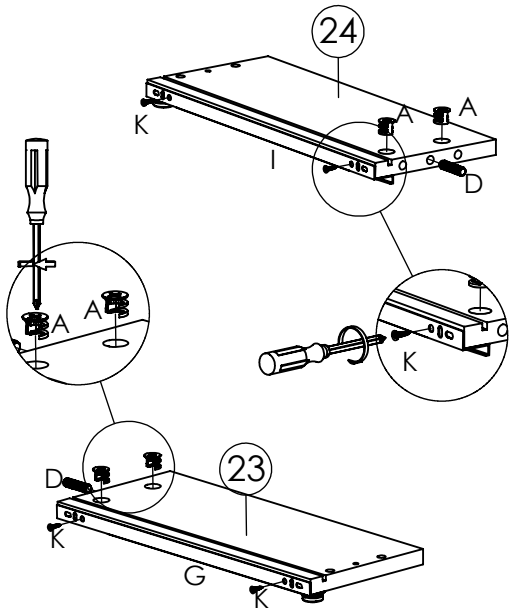

Ø15x12 MM	Ø8x32 MM	L=350MM	L=350MM	Ø6x13 MM
Ax4	Dx2	Gx1	Ix1	Nx4

10

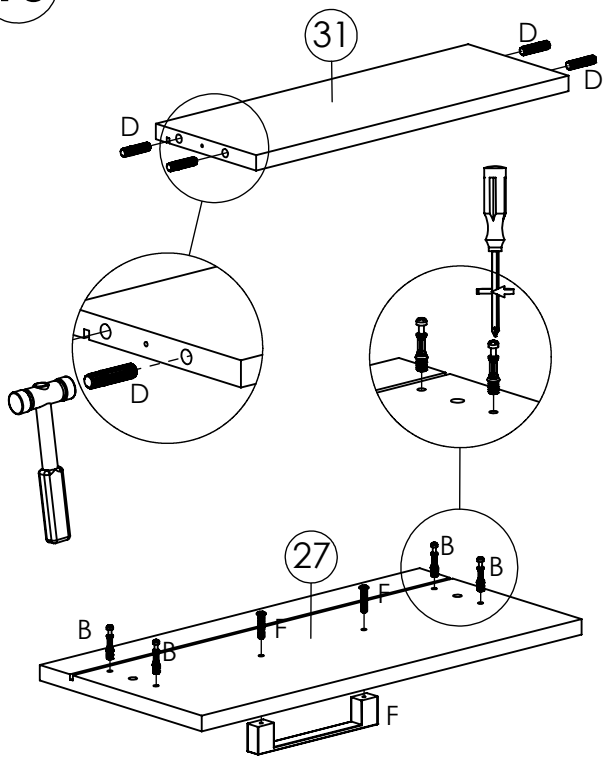

Ø6x32 MM	Ø8x32 MM	149x27x15 MM
Bx4	Dx4	Fx1

11

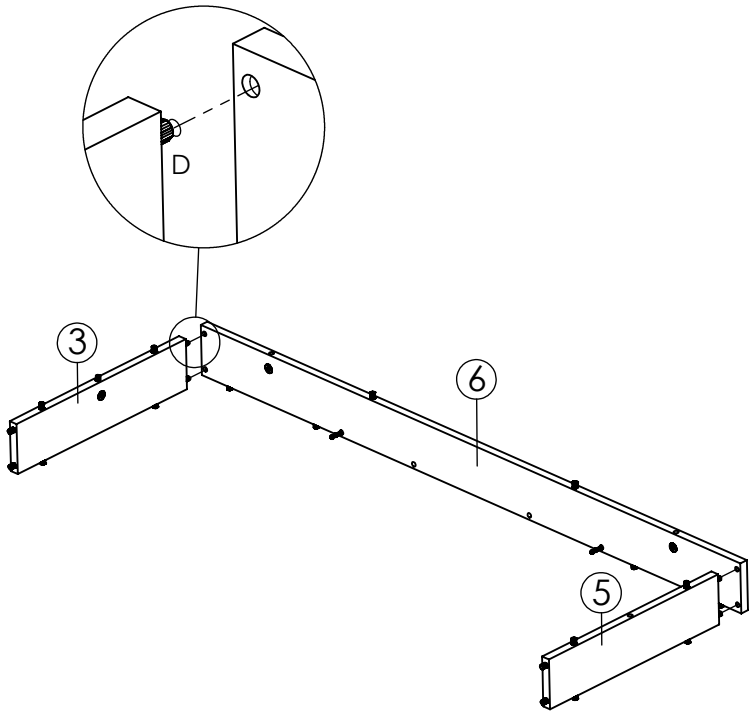

12

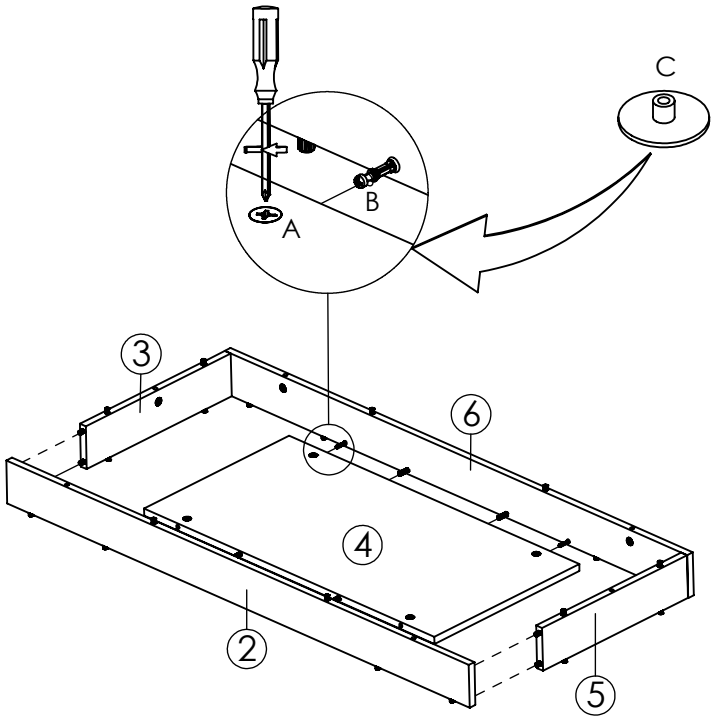

Ø18x5 MM



Cx4

13

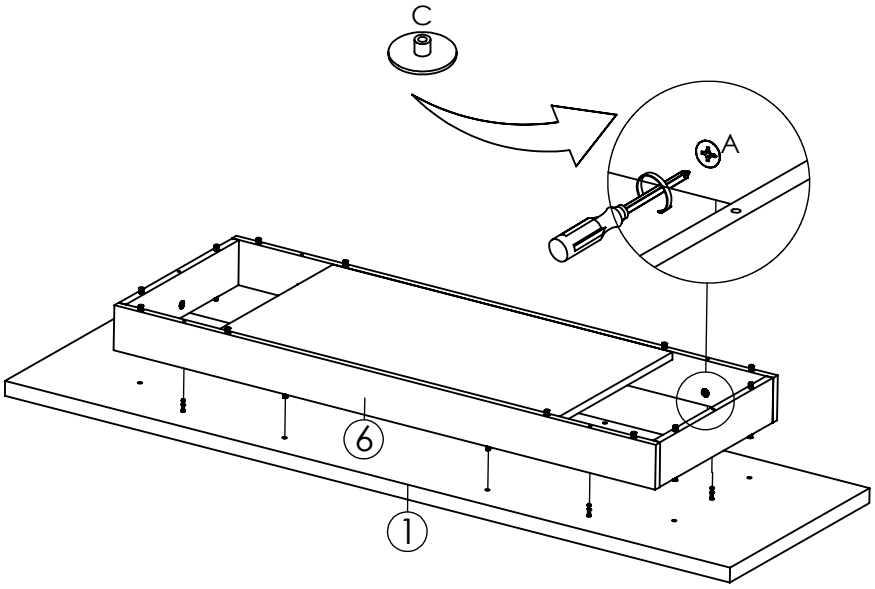

Ø18x5 MM



Cx6

14

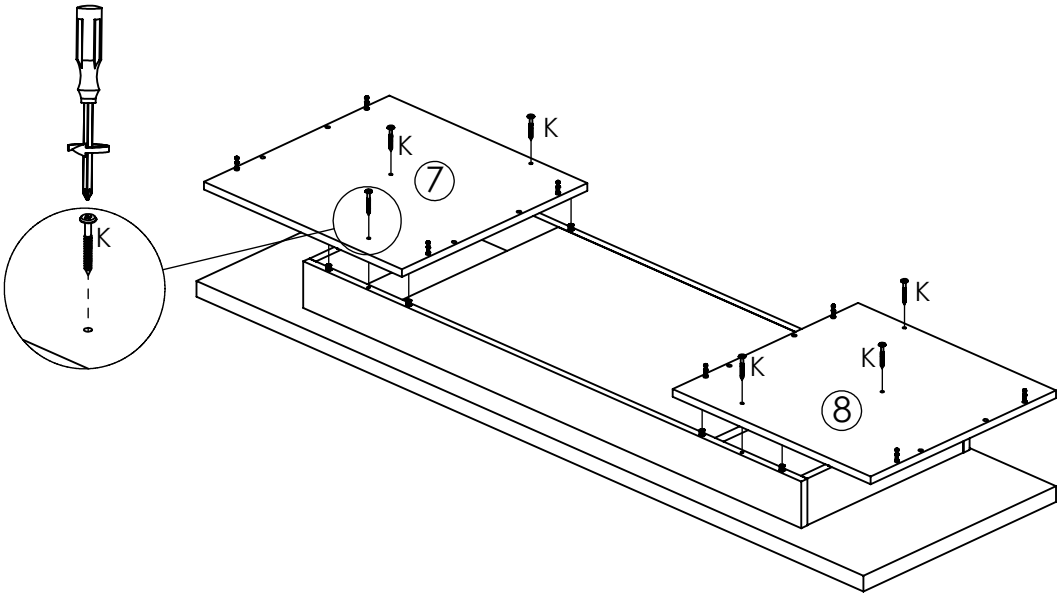

Ø11x46 MM



Kx6

15

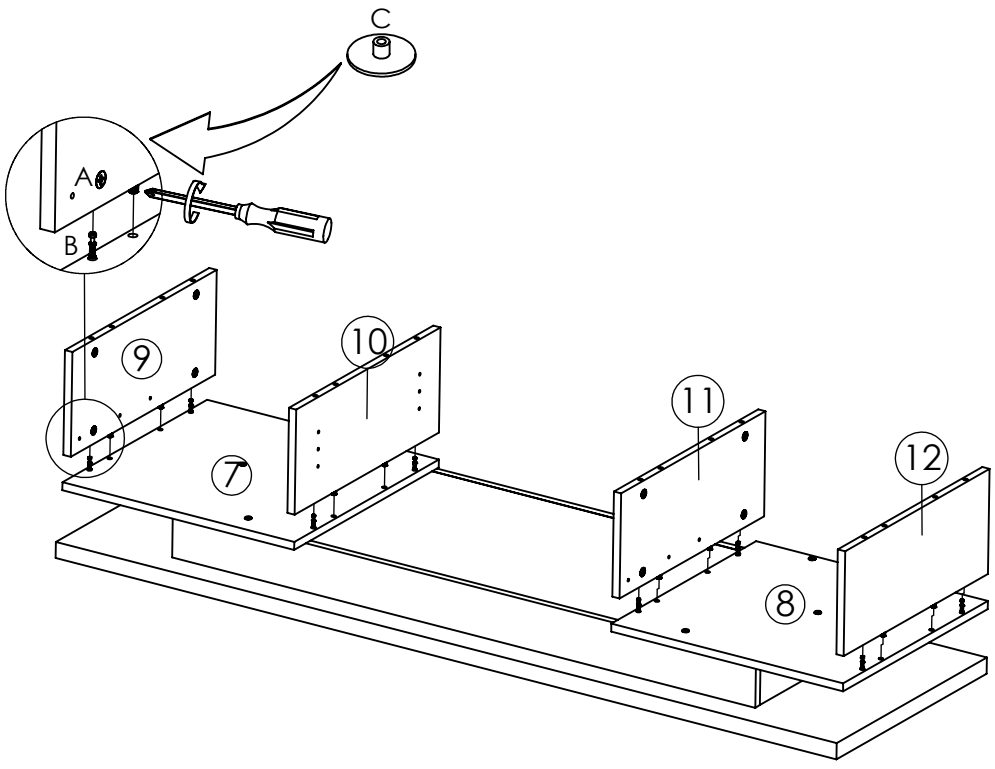

Ø18x5 MM



Cx8

16

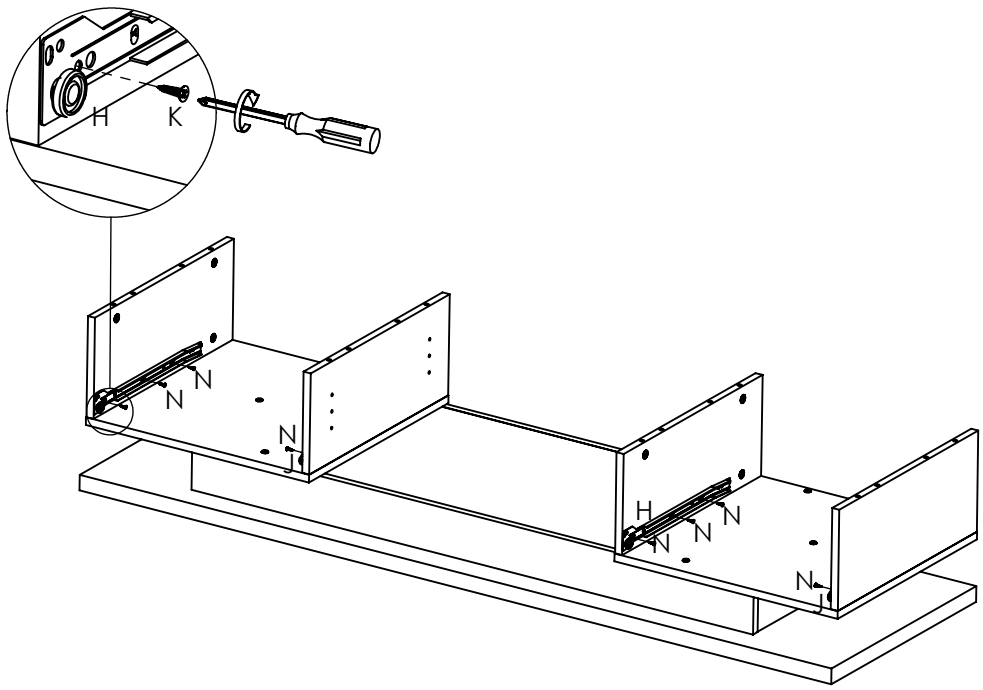

L=350MM	L=350MM	Ø6x13 MM
		
Jx2	Hx2	Nx12

17

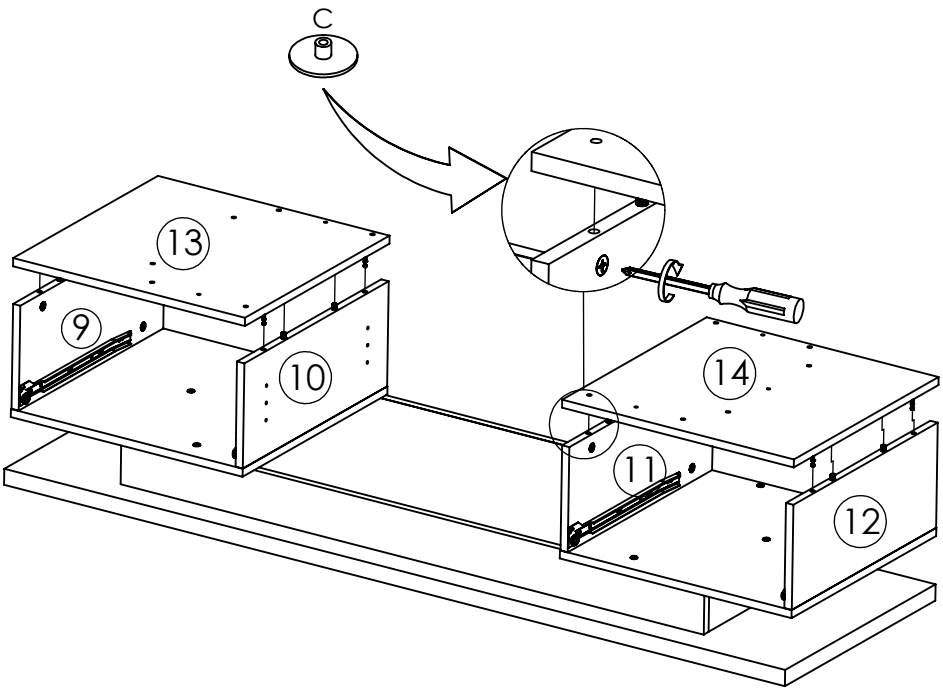

Ø18x5 MM

Cx8

18

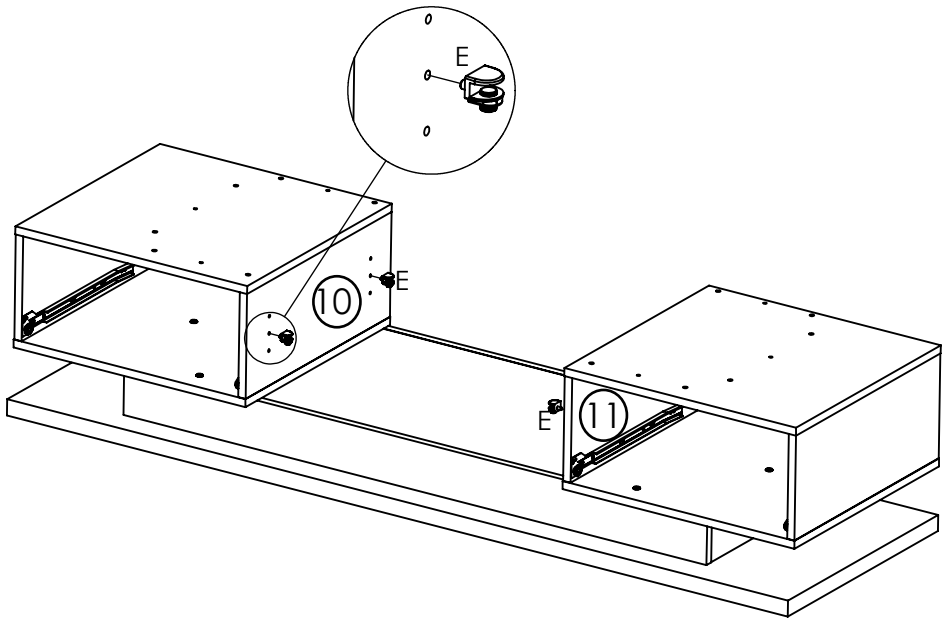

21x20 MM



Ex4

19

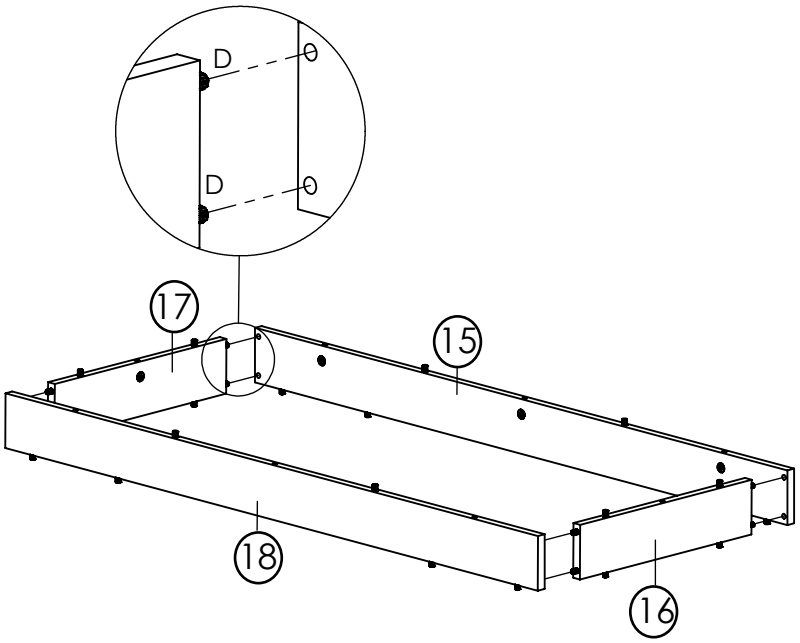

20

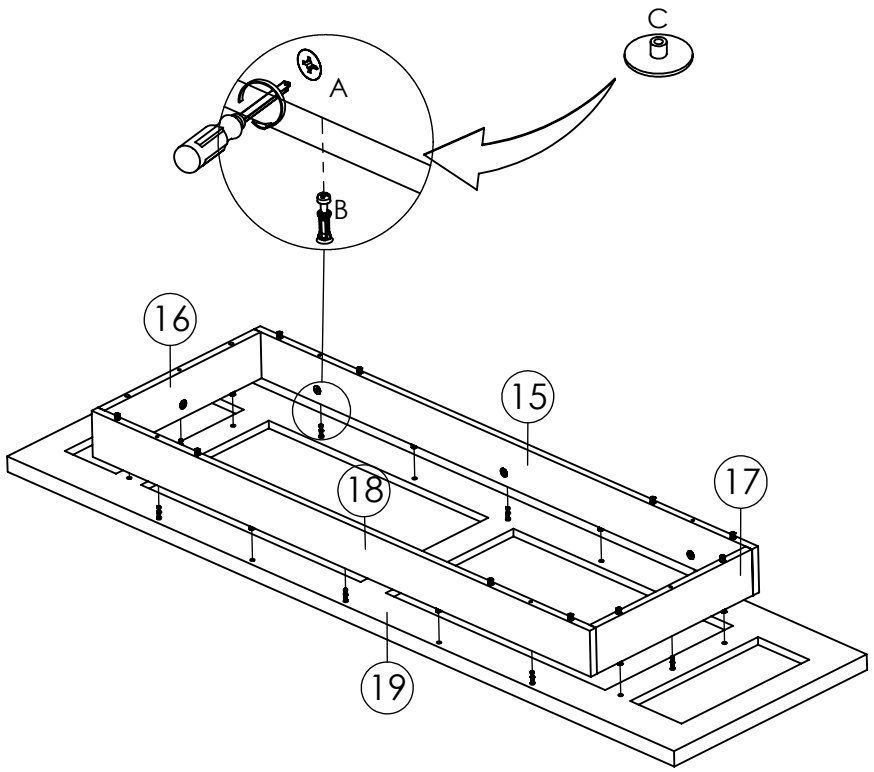

Ø18x5 MM



Cx8

21

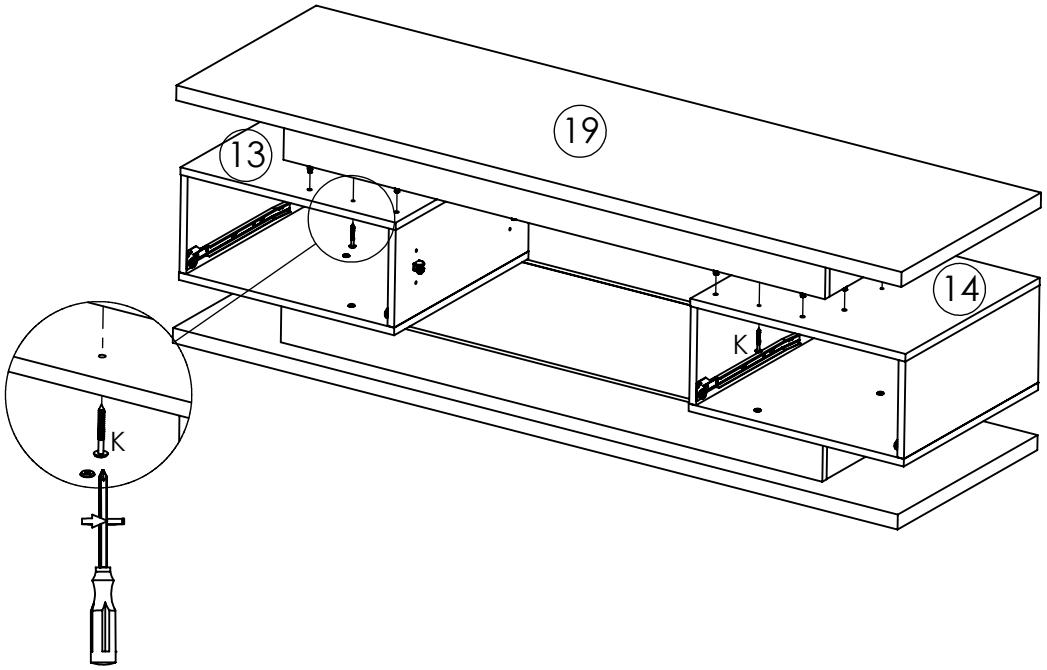

Ø11x46 MM



Kx6

22

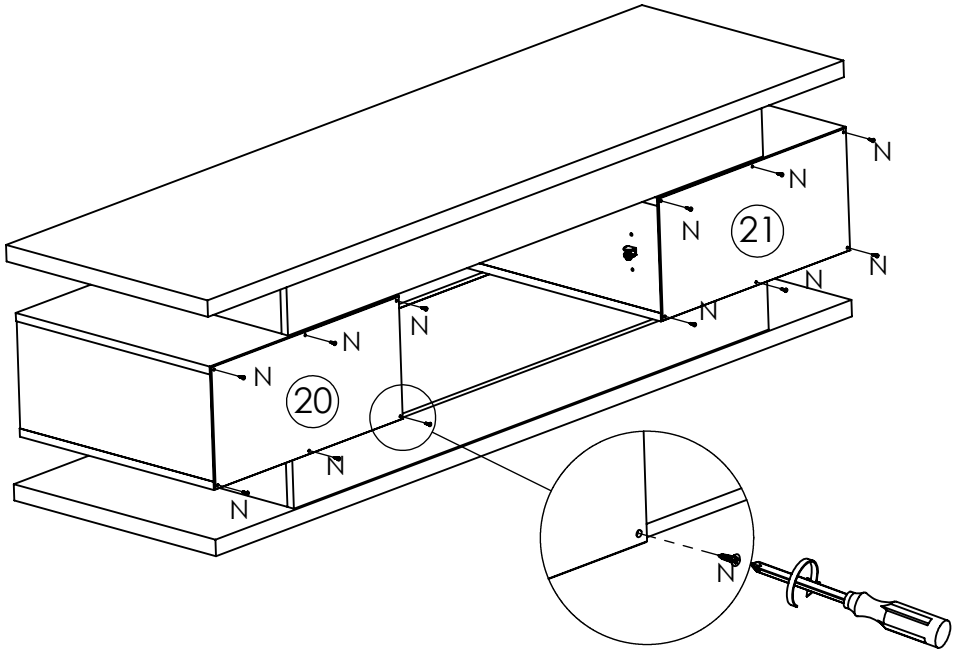

Ø6x13 MM



Nx12

23

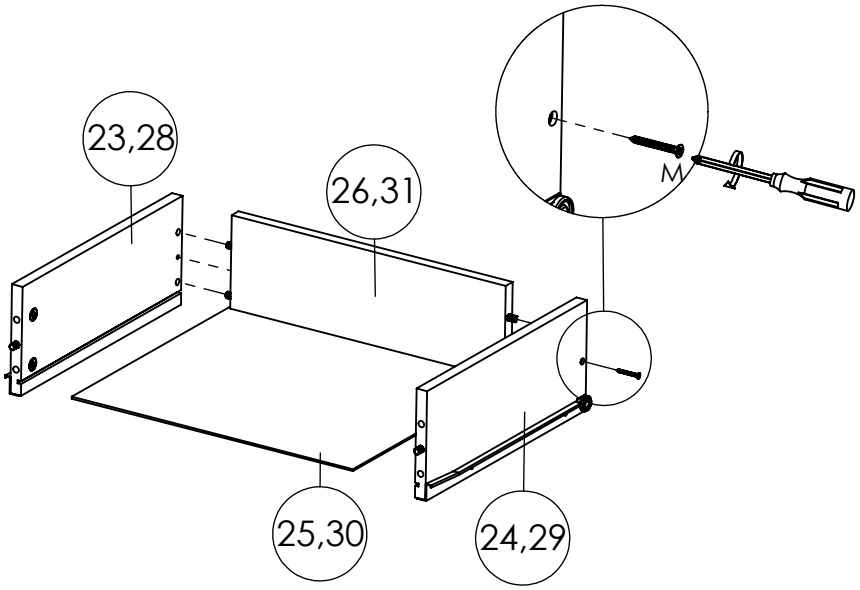

Ø7x32 MM



Mx4

24

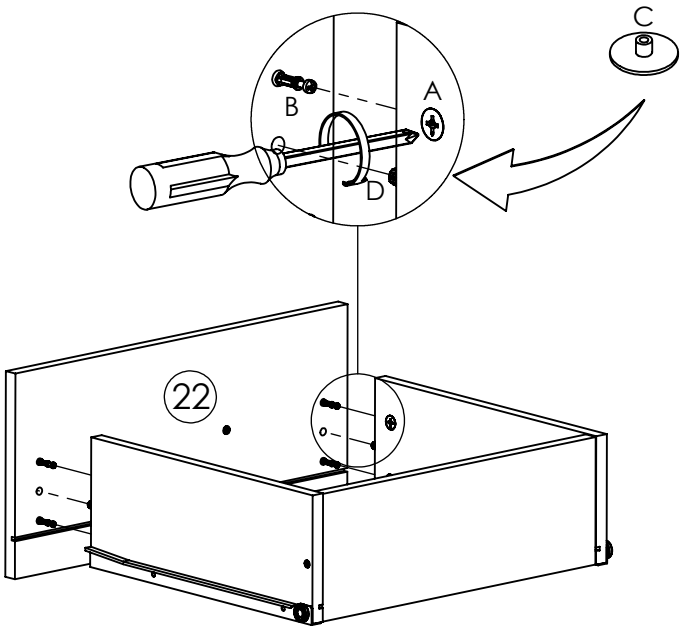

Ø18x5 MM



Cx4

25

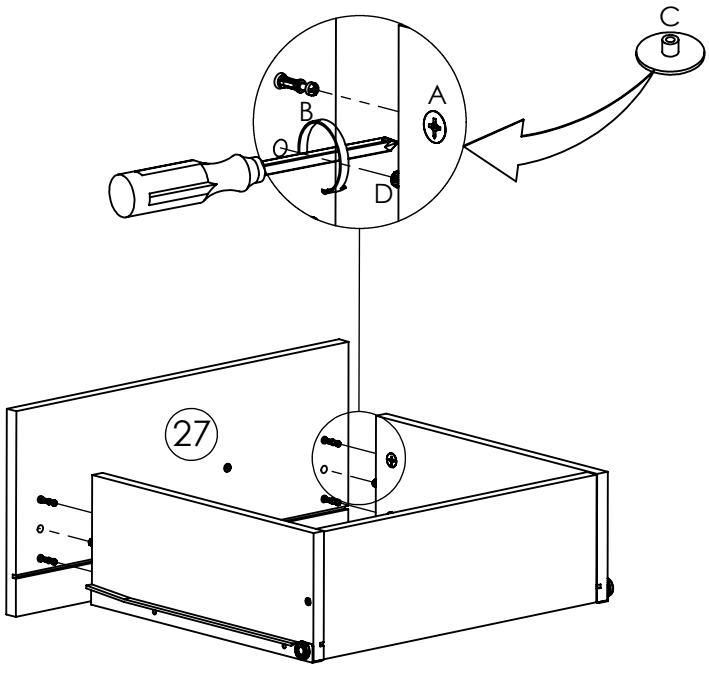

Ø18x5 MM



Cx4

26

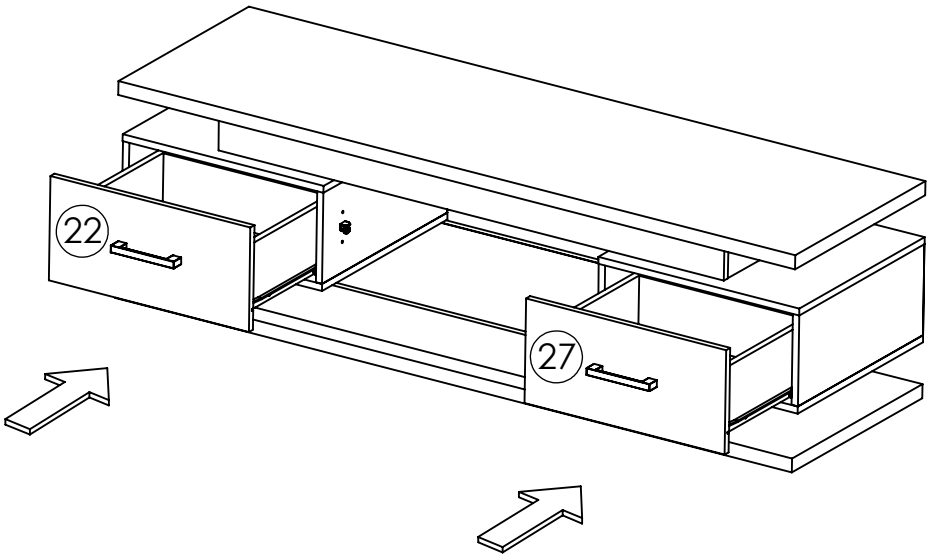

27

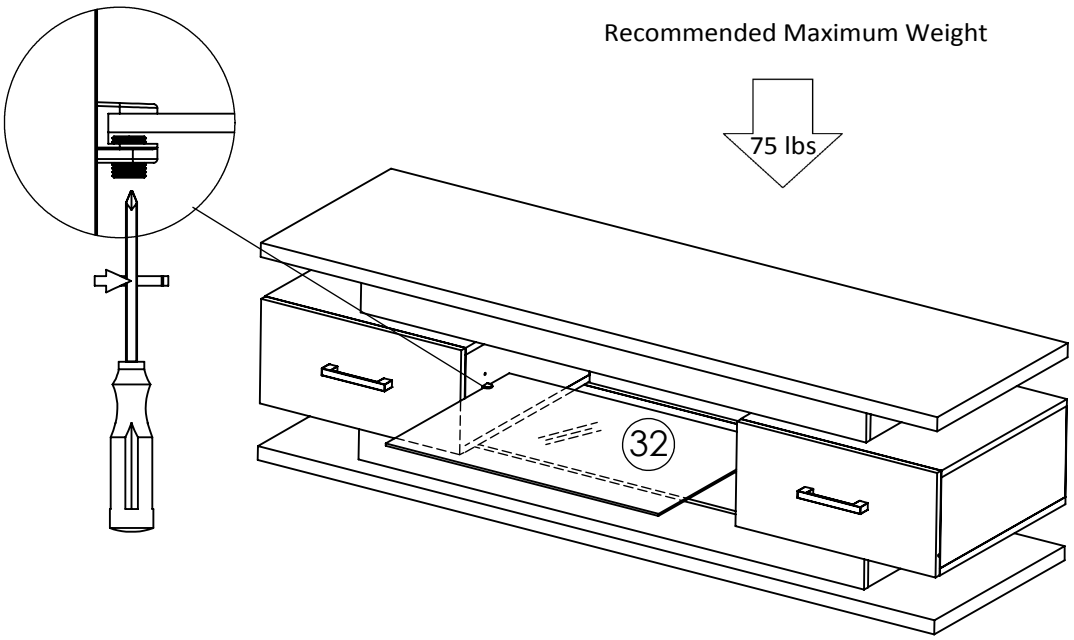

WARNING:

>This unit has been designed to support the maximum loads shown.
Exceeding these load limits could cause sagging,instability,product collapse,and/or serious injury.
>DO NOT allow children to climb on unit