FVR7278

Furinno TV / Entertainment Stand

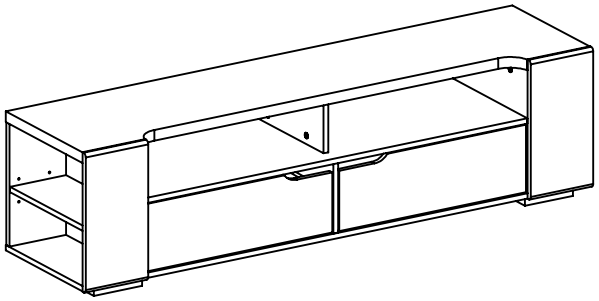

www.furinno.com

NEED HELP? For replacement requests or product inquiries, please contact our Customer Service Team by emailing us at **support@furinno.com**. Thank you for selecting Furinno!

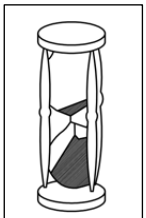

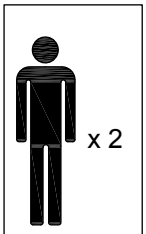

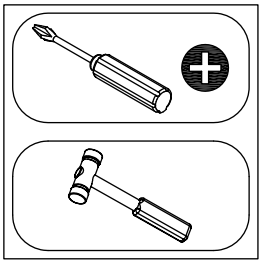

USEFUL HINTS BEFORE YOU START:

1. Read each step carefully before starting.
2. It is important that each step is performed in correct order to avoid difficulties.
3. Identify, sort and count the parts before assembly.
4. Assemble your furniture on packaging cardboard to prevent scratch or damage.
5. Clean the product with mild cleanser using soft damped cloth.
   Do not use harsh or abrasive cleanser.
6. Using uncompatible hardware might cause damage to product.

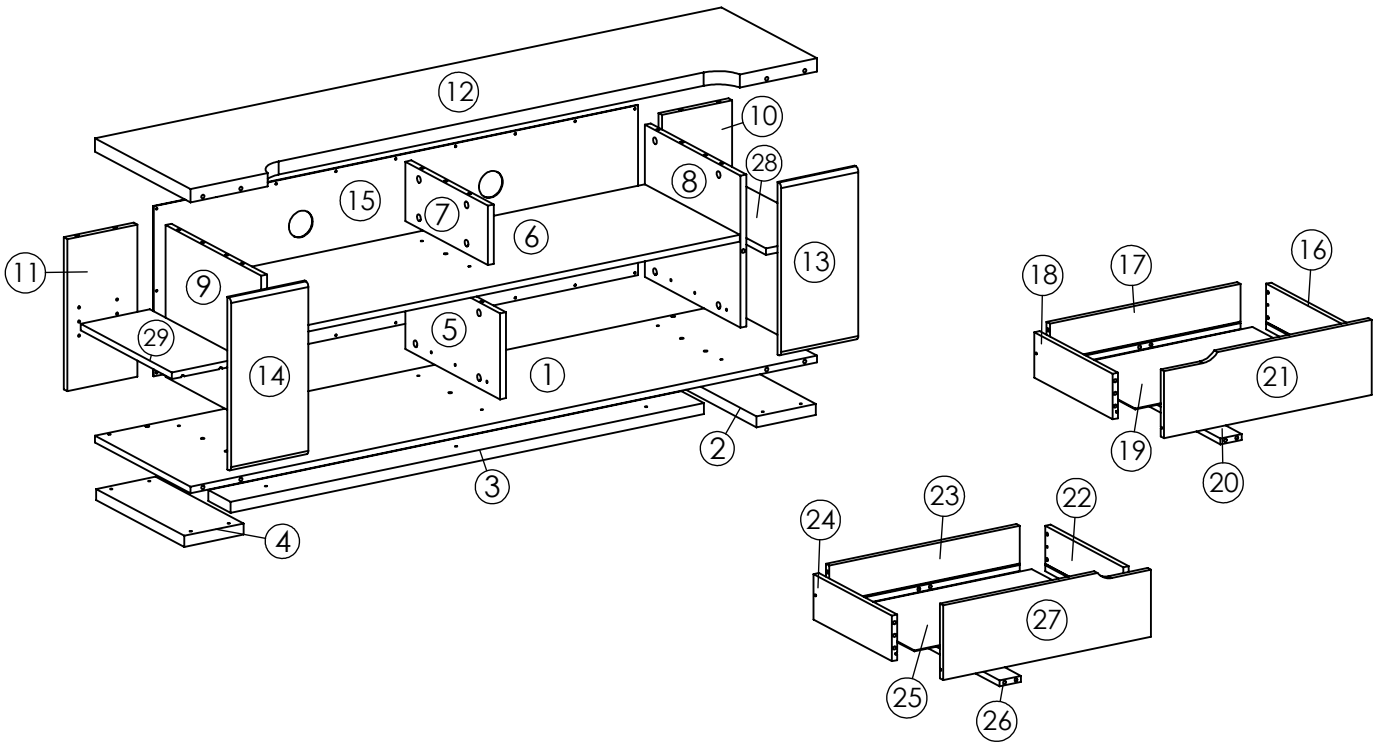

Ø15x12 MM  Ax34	Ø6x32 MM  Bx34	Ø18x5 MM  Cx34	Ø8x32 MM  Dx48	Ø6x13MM  Ex40	Ø7x32 MM  Fx15	L=350 MM 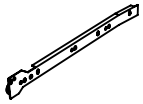 Gx2	L=350 MM  Hx2
L=350 MM 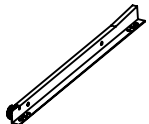 Ix2	L=350 MM  Jx2	Ø18x19.5 MM  Kx6	Ø5x12 MM  Lx8				

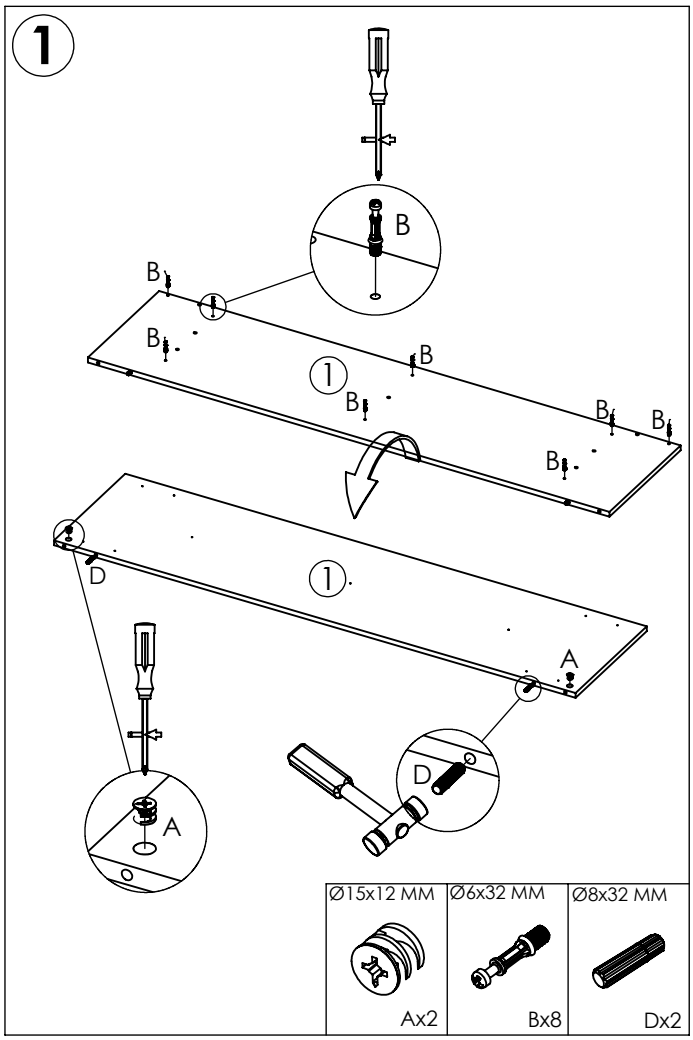
1
B
B
B
B
B
B
B
B
B
1
1
D
A
D
A
Ø15x12 MM
Ax2
Ø6x32 MM
Bx8
Ø8x32 MM
Dx2

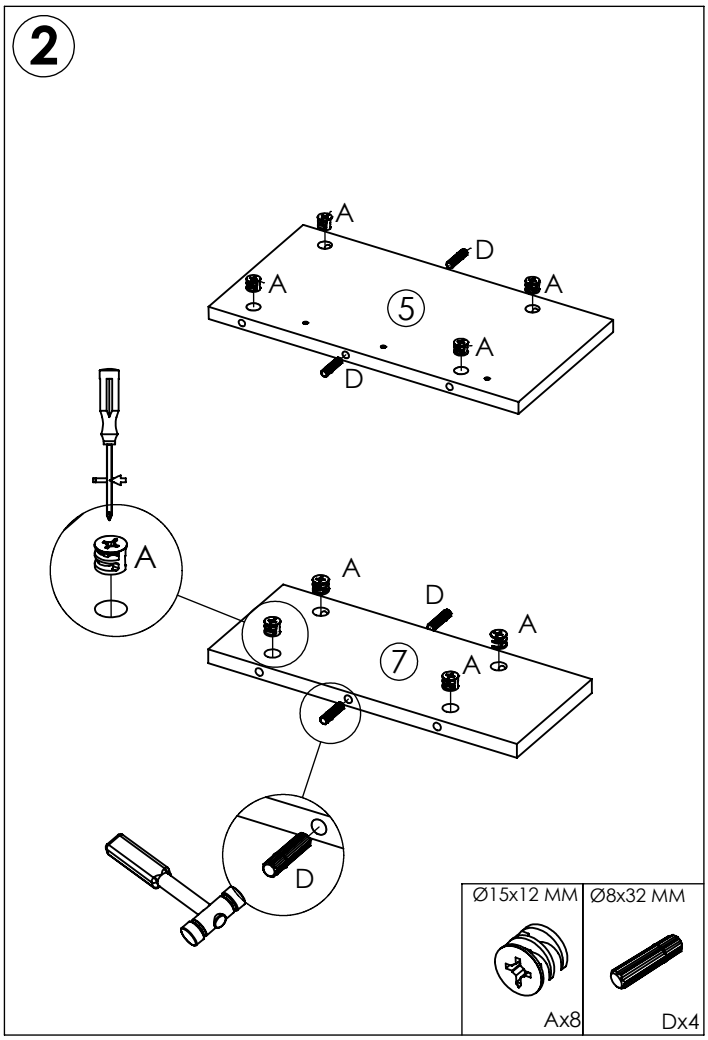
2
A
D
A
A
5
A
D
A
A
A
D
A
7
A
D
Ø15x12 MM
Ax8
Ø8x32 MM
Dx4

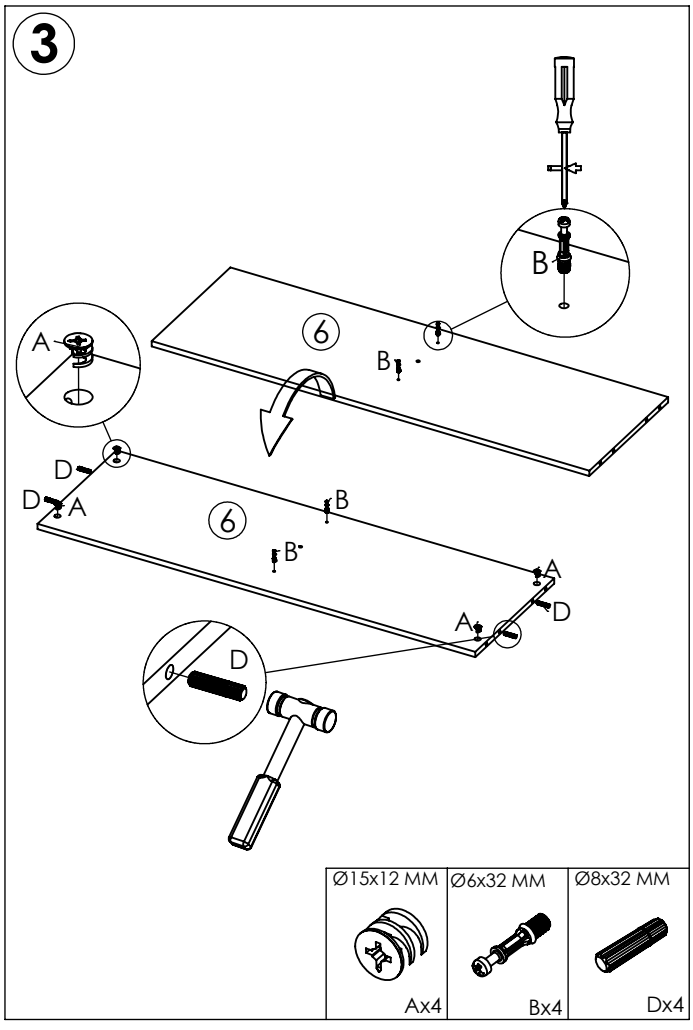
3
B
6
B
A
D
D
A
6
B
B
A
A
D
D
Ø15x12 MM
Ax4
Ø6x32 MM
Bx4
Ø8x32 MM
Dx4

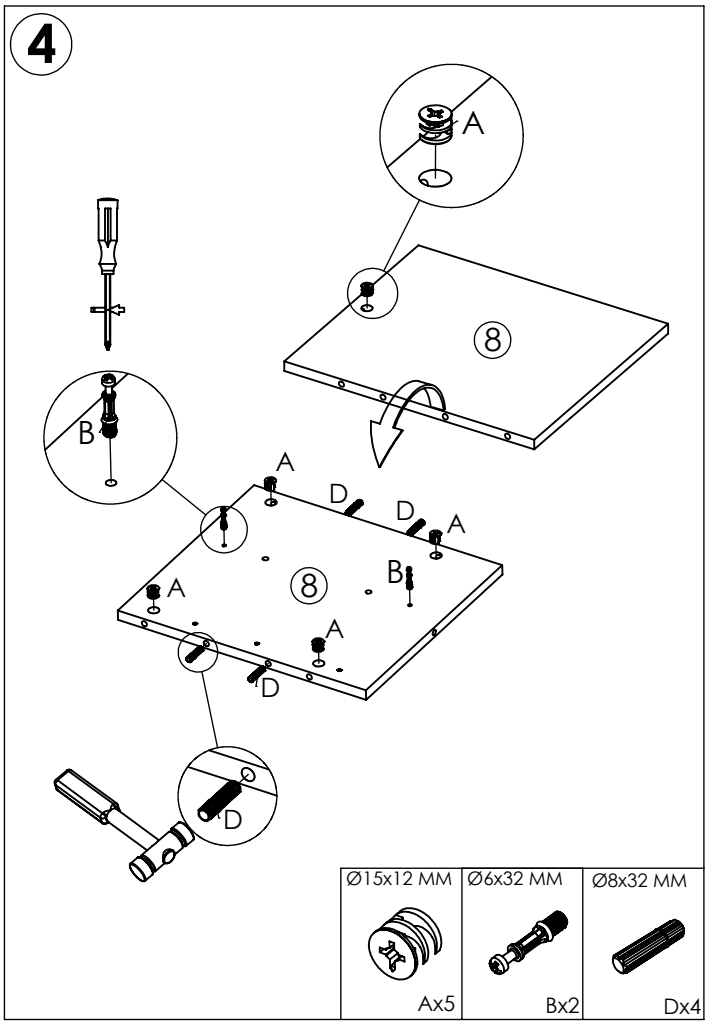
4
A
8
B
A
D
D
A
A
8
B
A
D
D
Ø15x12 MM
Ax5
Ø6x32 MM
Bx2
Ø8x32 MM
Dx4

5

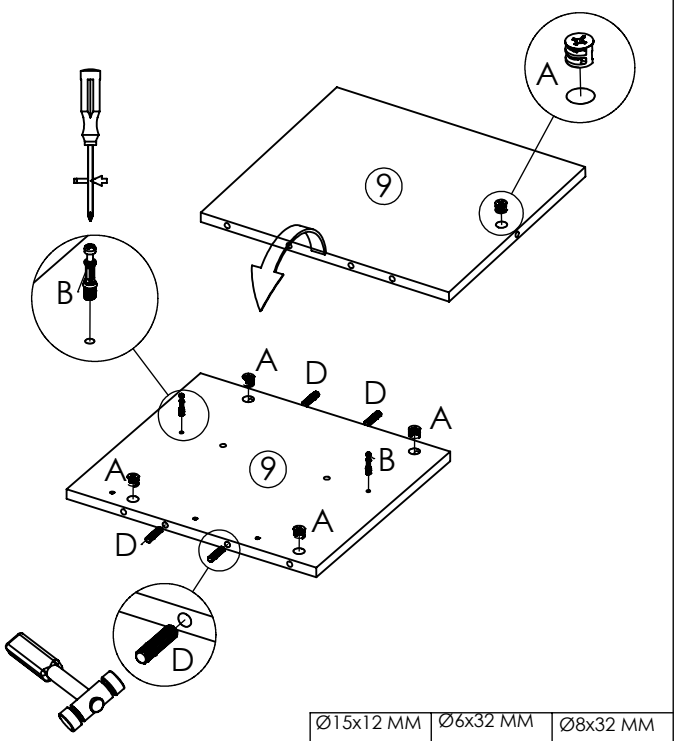

Ø15x12 MM	Ø6x32 MM	Ø8x32 MM
Ax5	Bx2	Dx4

6

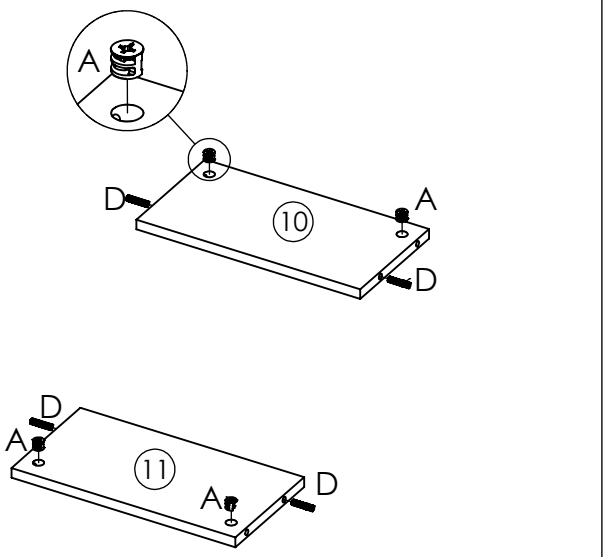

Ø15x12 MM	Ø8x32 MM
Ax4	Dx4

7

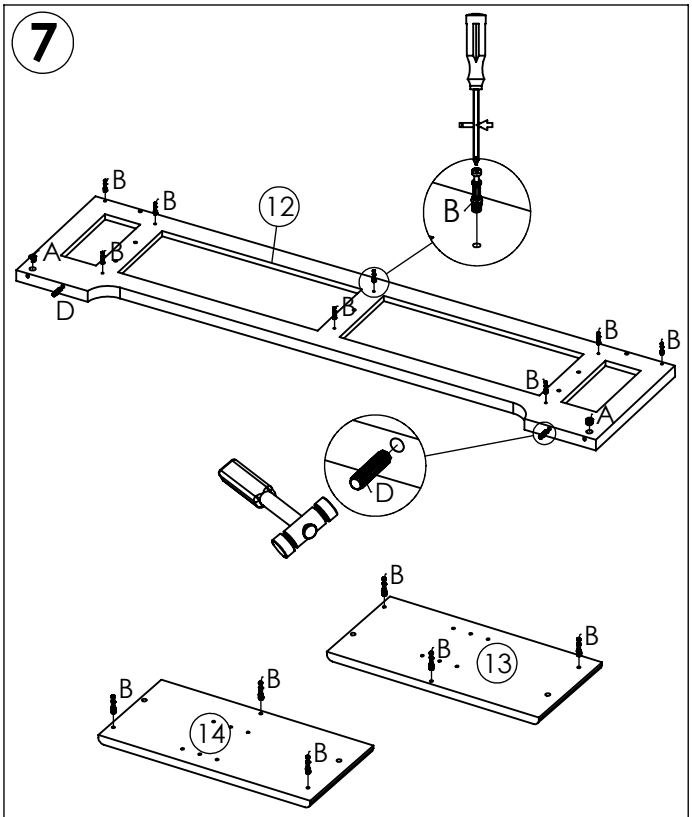

Ø15x12 MM	Ø6x32 MM	Ø8x32 MM
Ax2	Bx14	Dx2

8

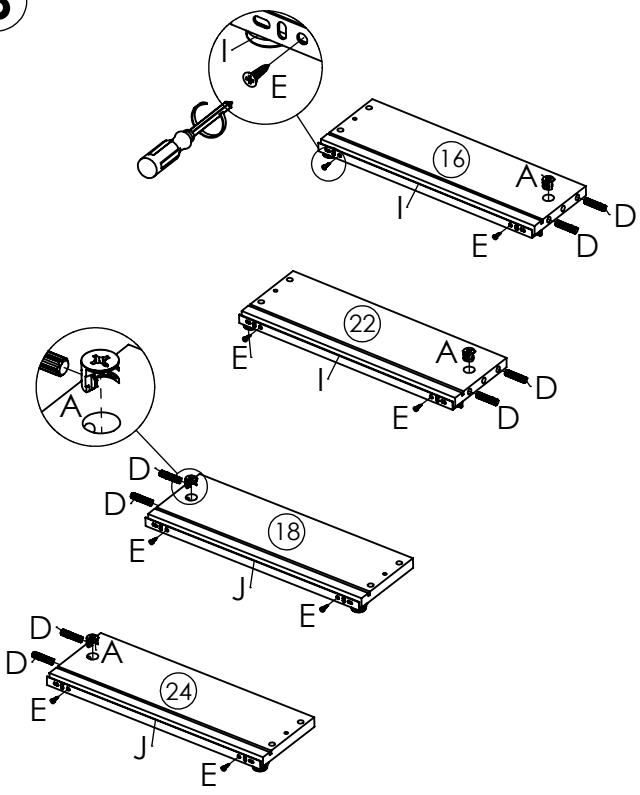

Ø15x12 MM	Ø8x32 MM	Ø6x13MM	L=350 MM	L=350 MM
Ax4	Dx8	Ex8	Ix2	Jx2

9

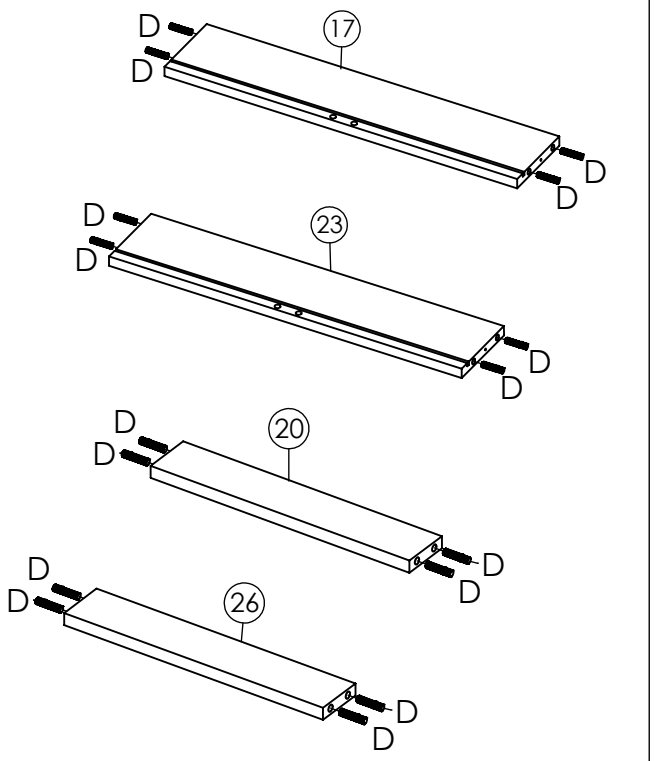

Ø8x32 MM



Dx16

10

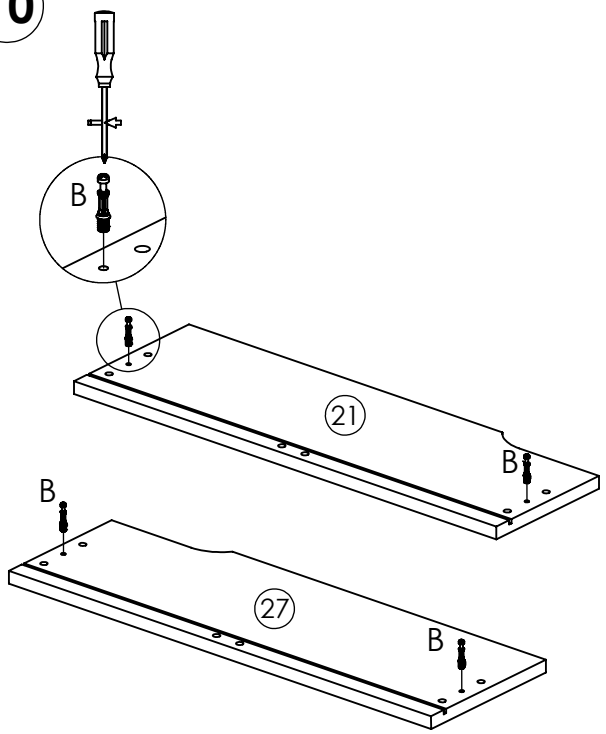

Ø6x32 MM



Bx4

11

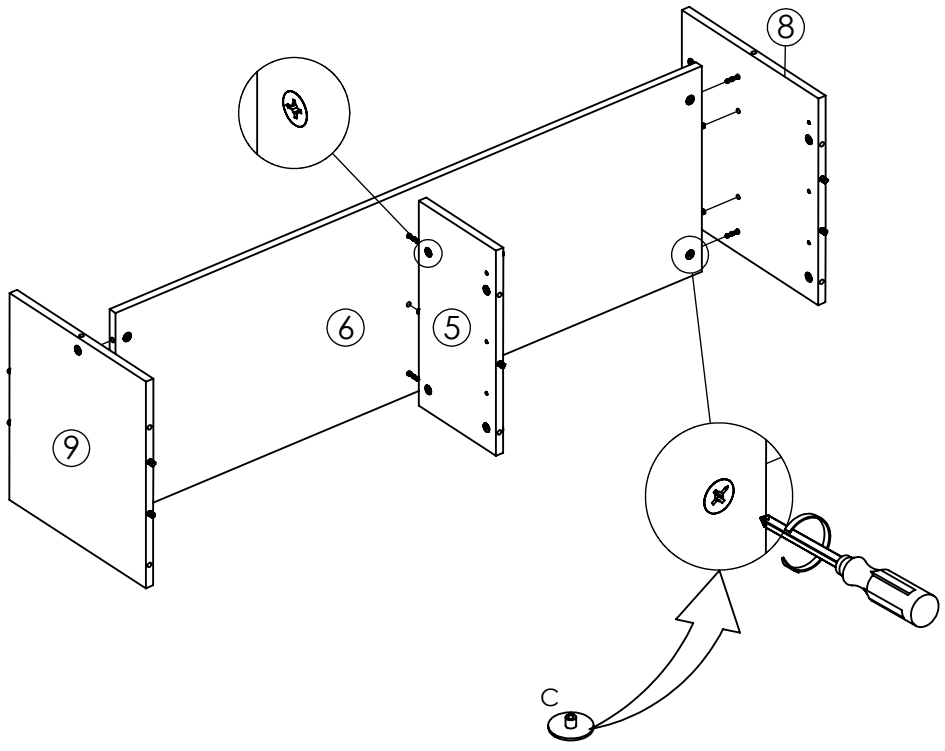

Ø18x5 MM



Cx6

12

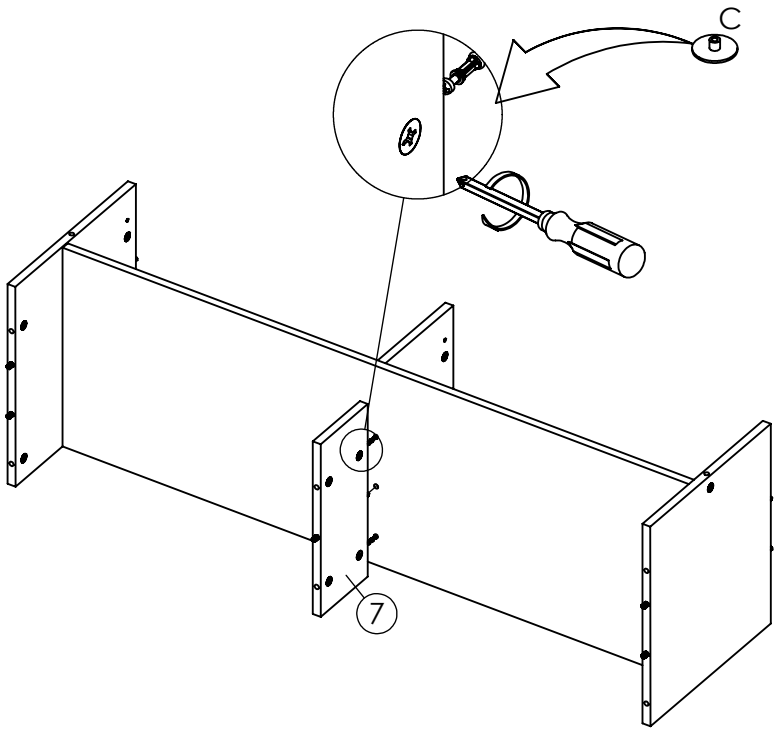

Ø18x5 MM



Cx2

13

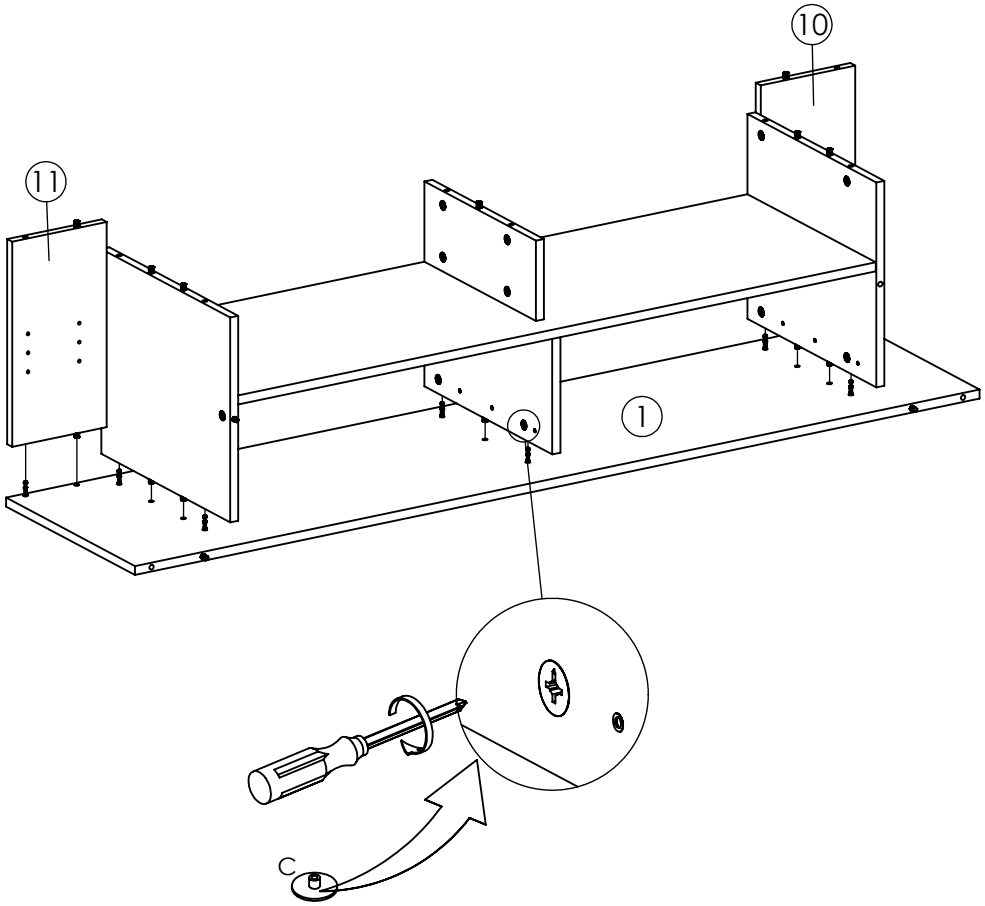

Ø18x5 MM



Cx8

14

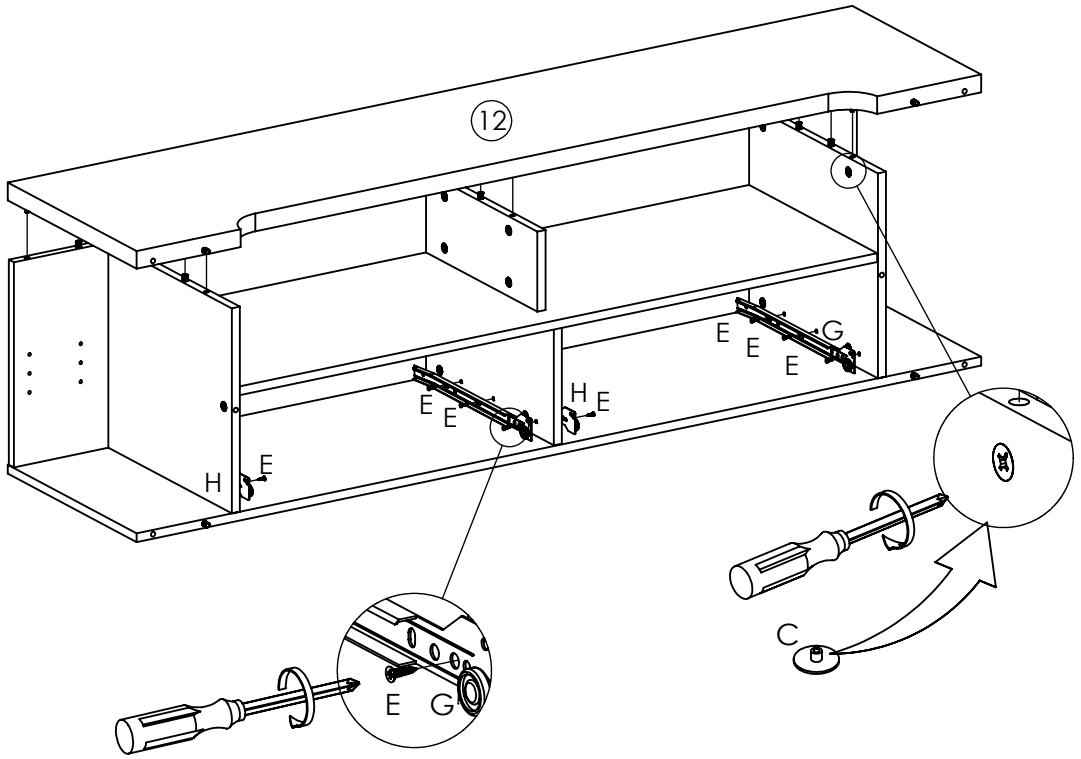

Ø18x5 MM	Ø6x13MM	L=350 MM	L=350 MM
Cx8	Ex12	Gx2	Hx2

15

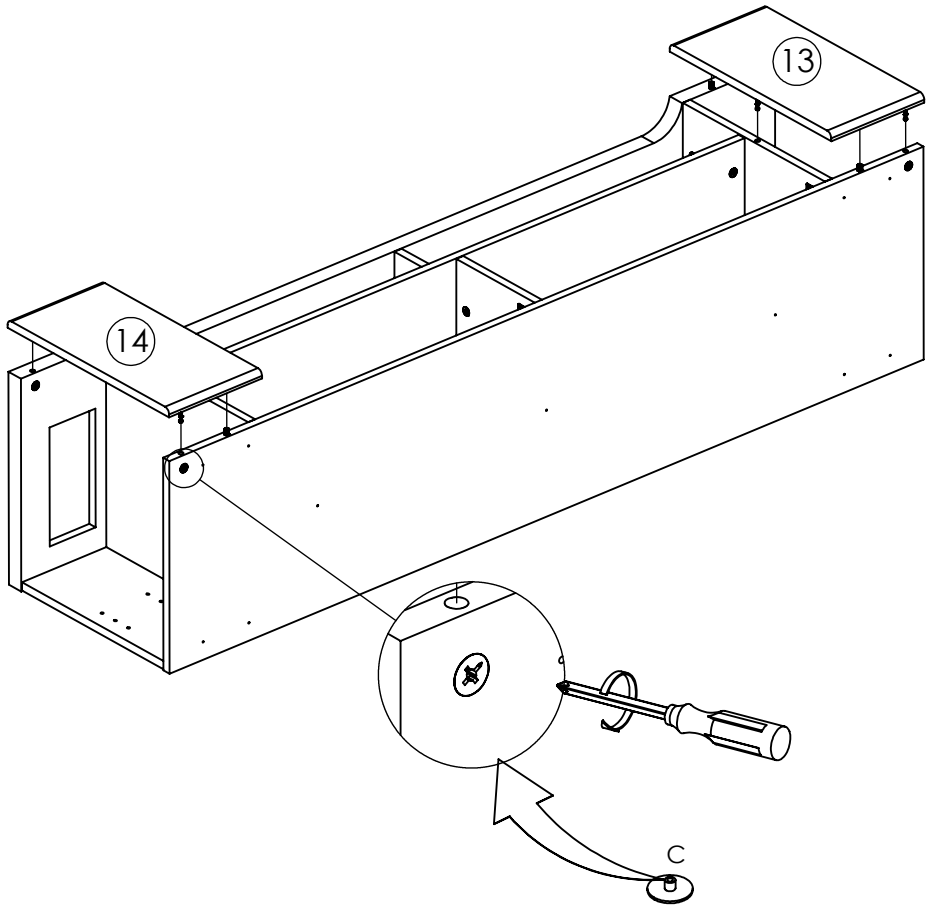

Ø18x5 MM
Cx6

16

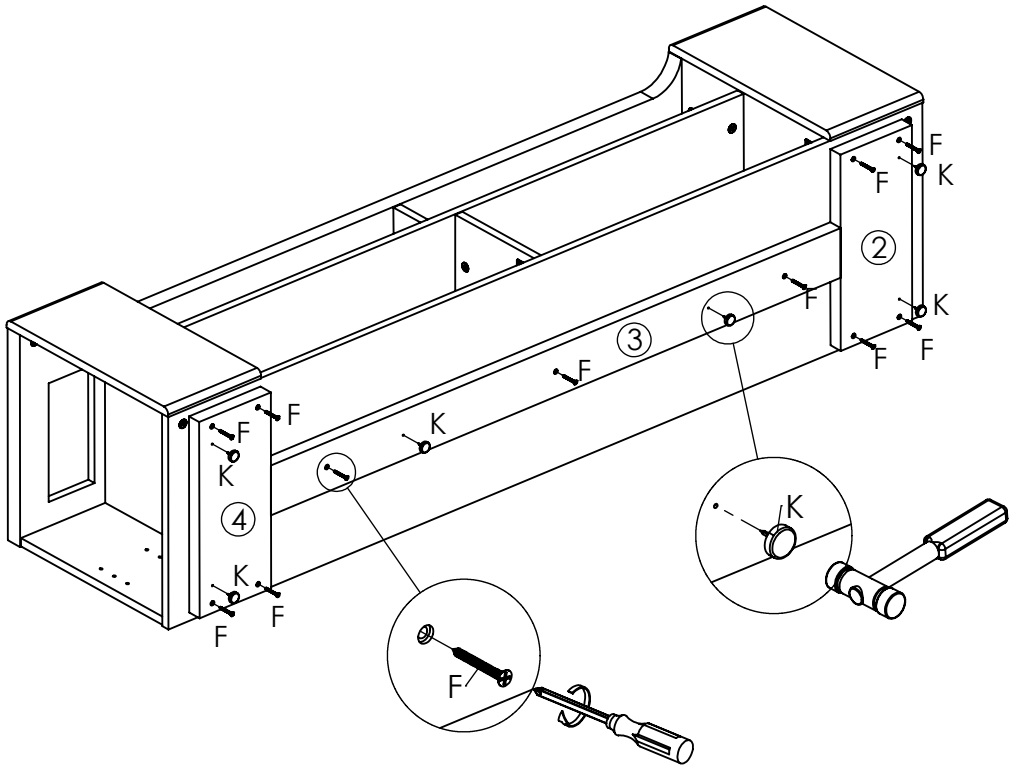

Ø7x32 MM	Ø18x19.5 MM
Fx11	Lx6

17

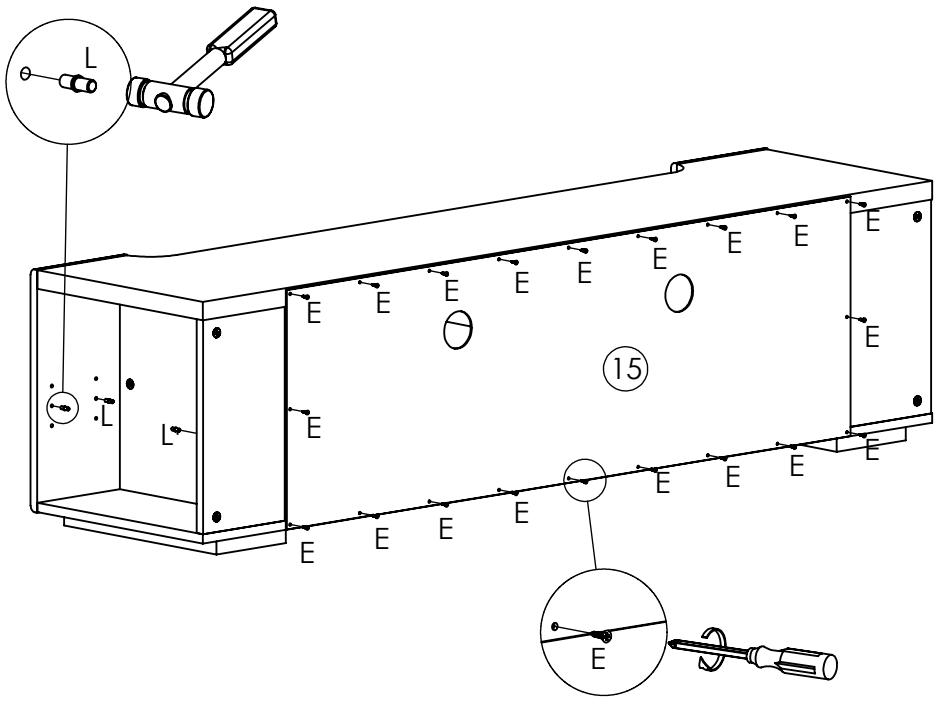

Ø6x13MM	Ø5x12 MM
Ex20	Lx8

18

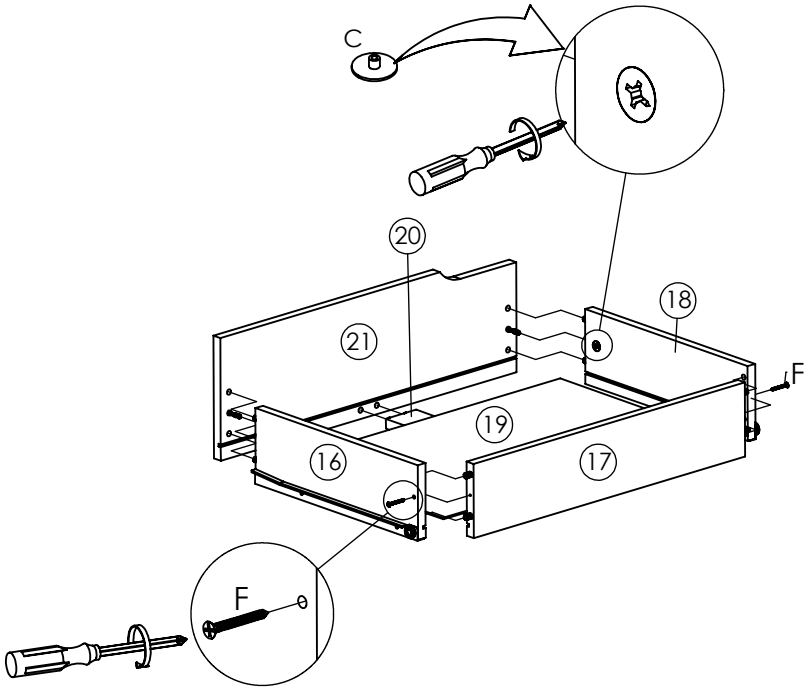

Ø7x32 MM	Ø18x5 MM
Fx2	Cx2

19

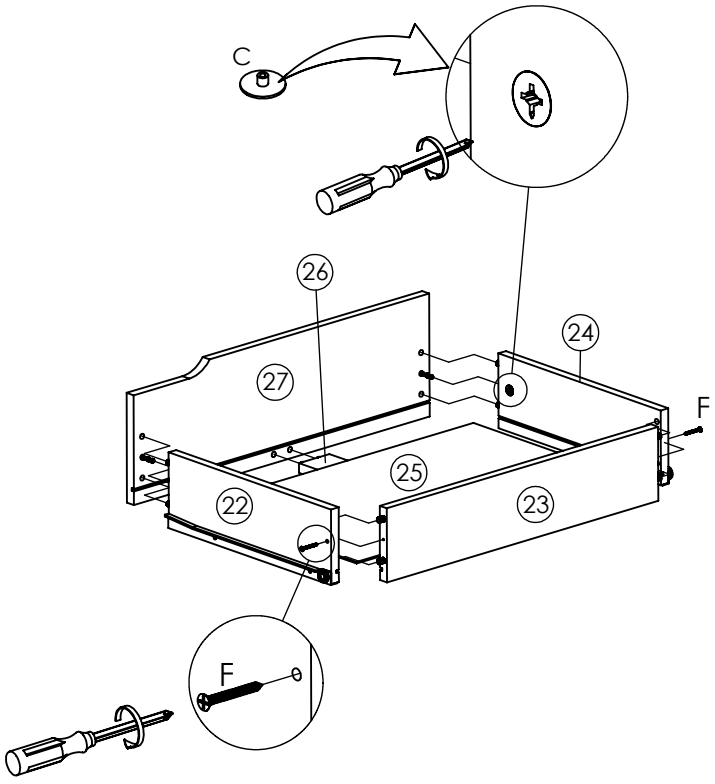

Ø7x32 MM	Ø18x5 MM
Fx2	Cx2

20

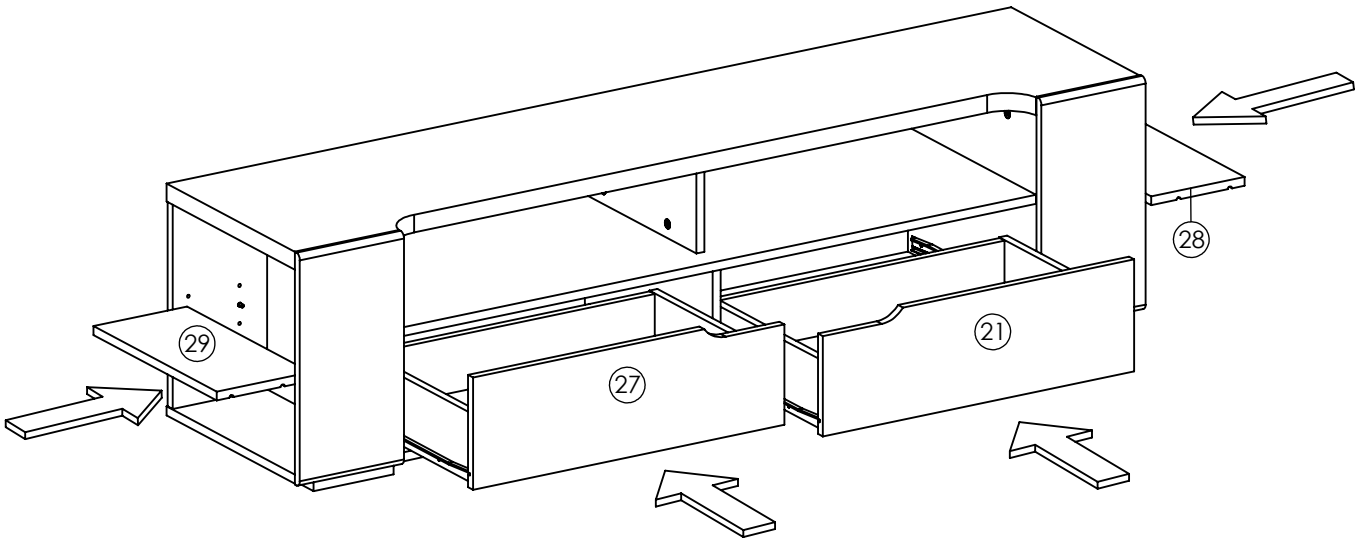

21

Recommended Maximum Weight

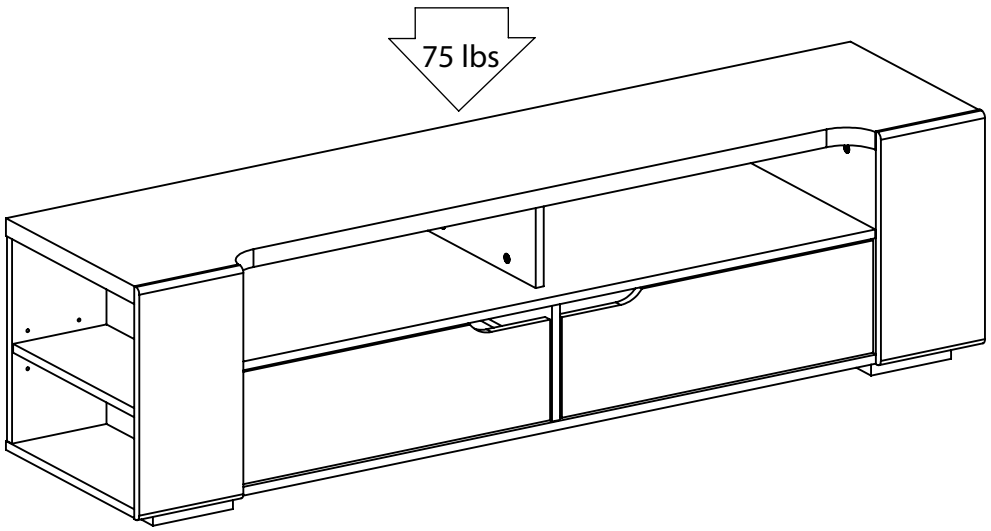

WARNING:

>This unit has been designed to support the maximum loads shown.
Exceeding these load limits could cause sagging, instability, product collapse, and/or serious injury.

>DO NOT allow children to climb on unit.