FVR7294

Furinno TV / Entertainment Stand

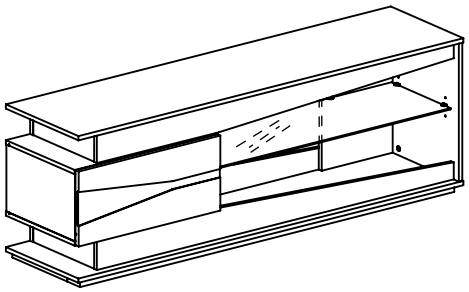

www.furinno.com

NEED HELP? For replacement requests or product inquiries, please contact our Customer Service Team by emailing us at **support@furinno.com**. Thank you for selecting Furinno!

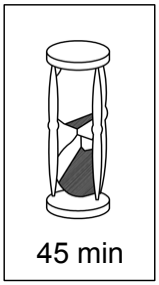

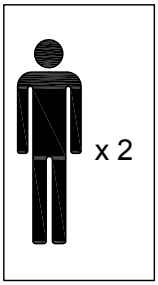

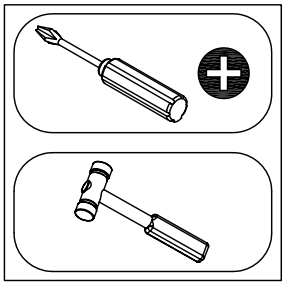

USEFUL HINTS BEFORE YOU START:

1. Read each step carefully before starting.
2. It is important that each step is performed in correct order to avoid difficulties.
3. Identify, sort and count the parts before assembly.
4. Assemble your furniture on packaging cardboard to prevent scratch or damage.
5. Clean the product with mild cleanser using soft damped cloth.
   Do not use harsh or abrasive cleanser.
6. Using uncompatible hardware might cause damage to product.

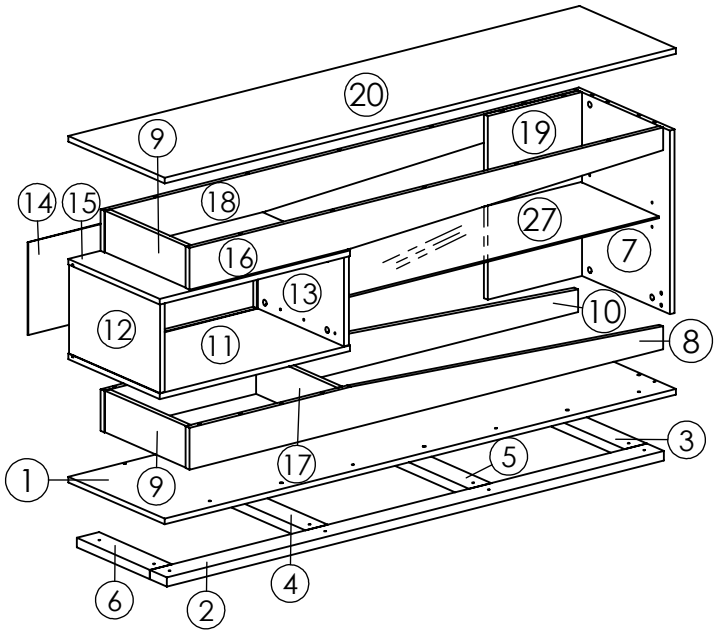

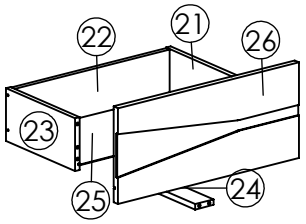

Ø15x12 MM A x 30	Ø6x32 MM B x 30	Ø18x5 MM C x 28	Ø8x32 MM D x 58	Ø21x20 MM E x 5	L=300 MM F x 1	L=300 MM G x 1	L=300 MM H x 1
L=300 MM I x 1	14x13x9 MM J x 6	Ø18x19.5 MM K x 7	Ø11x46MM L x 12	Ø7x32 MM M x 16	Ø5x16 MM N x 6	Ø6x13MM O x 10	

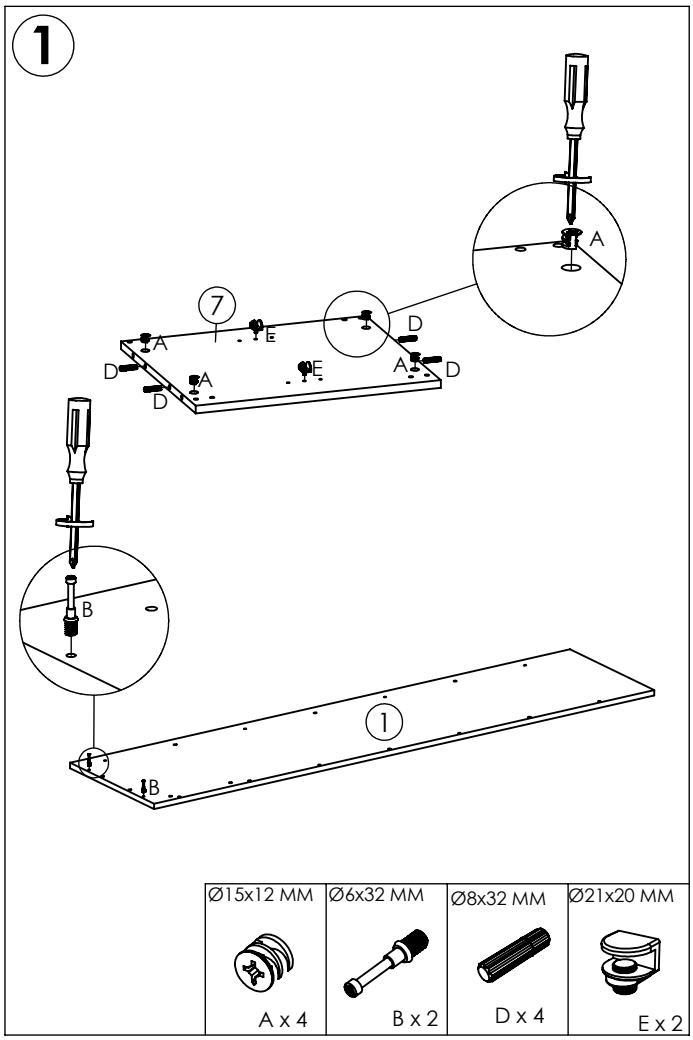

Ø15x12 MM	Ø6x32 MM	Ø8x32 MM	Ø21x20 MM
A x 4	B x 2	D x 4	E x 2

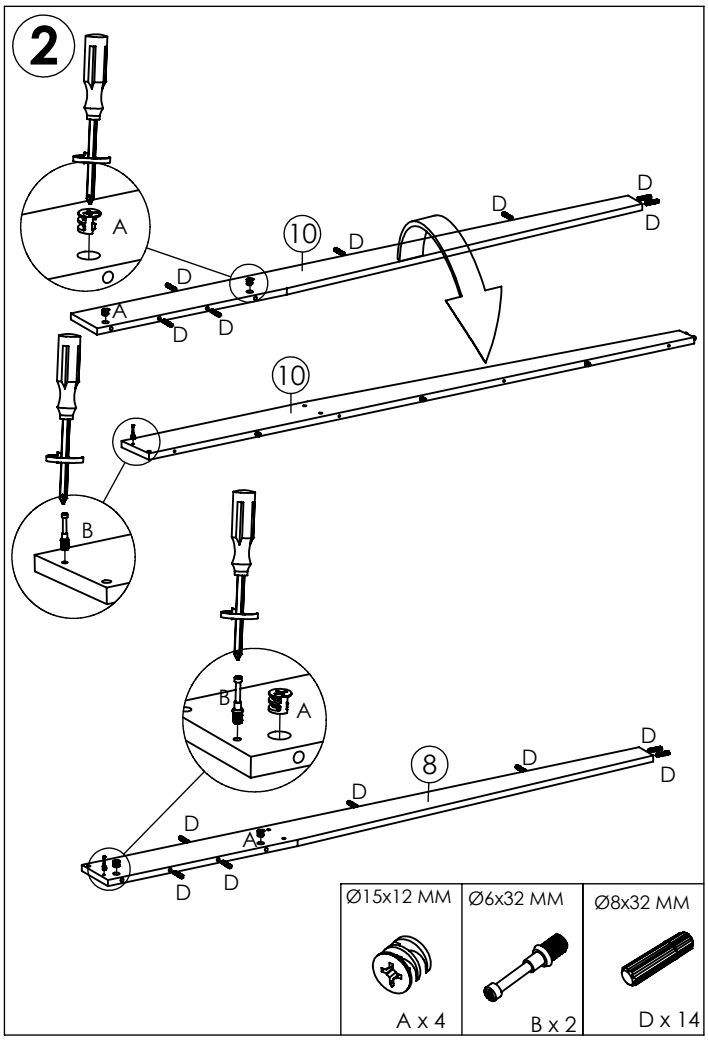

Ø15x12 MM	Ø6x32 MM	Ø8x32 MM
A x 4	B x 2	D x 14

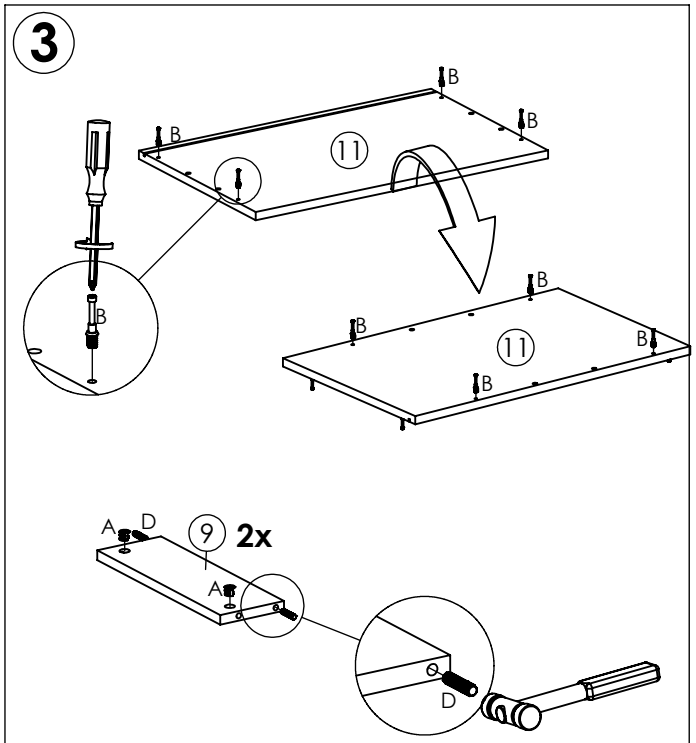

Ø15x12 MM	Ø6x32 MM	Ø8x32 MM
A x 4	B x 8	D x 4

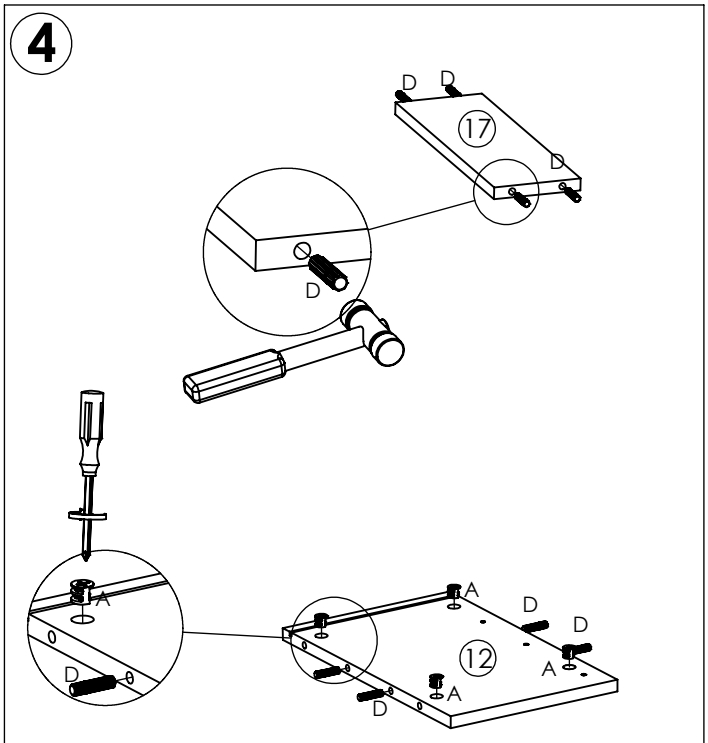

Ø15x12 MM	Ø8x32 MM
A x 4	D x 8

5

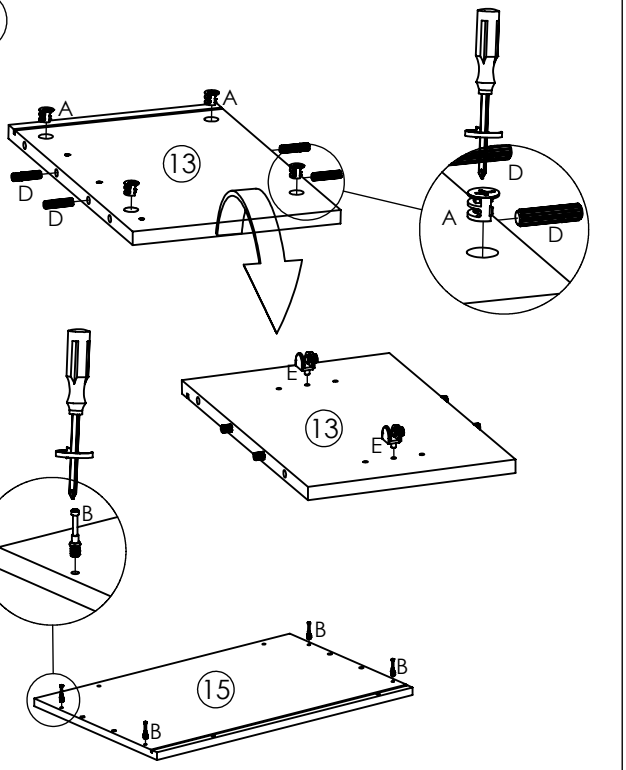

Ø15x12 MM	Ø6x32 MM	Ø8x32 MM	Ø21x20 MM
A x 4	B x 4	D x 4	E x 2

6

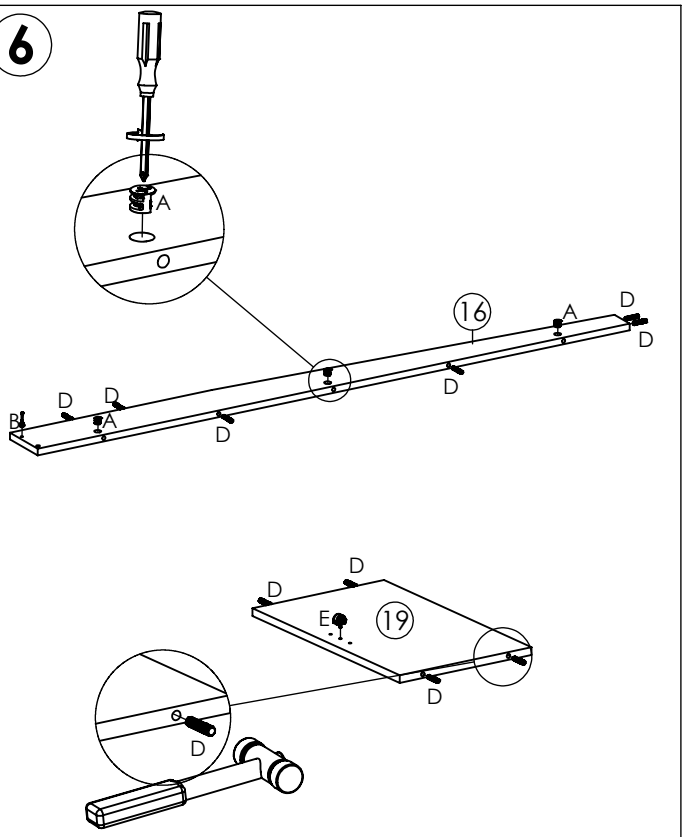

Ø15x12 MM	Ø6x32 MM	Ø8x32 MM	Ø21x20 MM
A x 3	B x 1	D x 10	E x 1

7

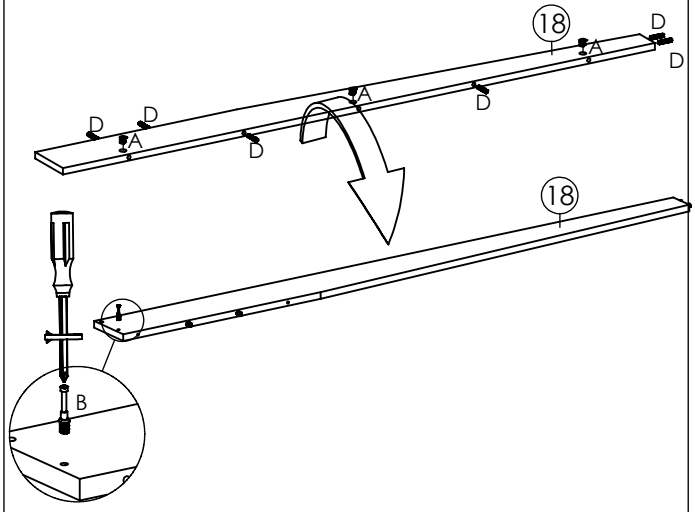

Ø15x12 MM	Ø6x32 MM	Ø8x32 MM
A x 3	B x 1	D x 6

8

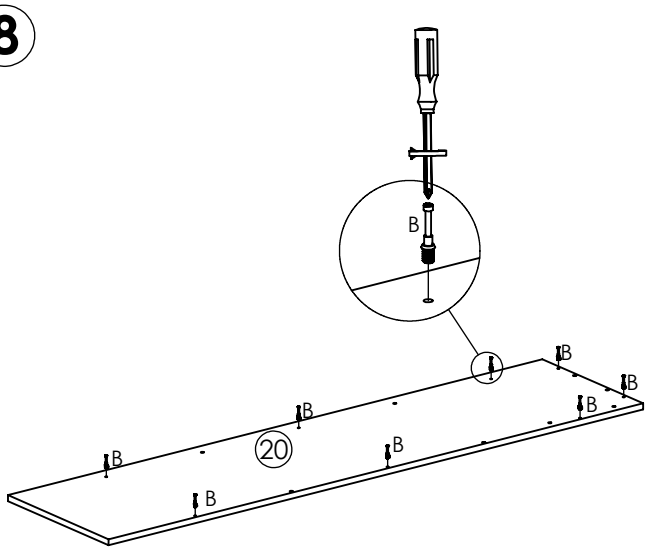

Ø6x32 MM
B x 8

9

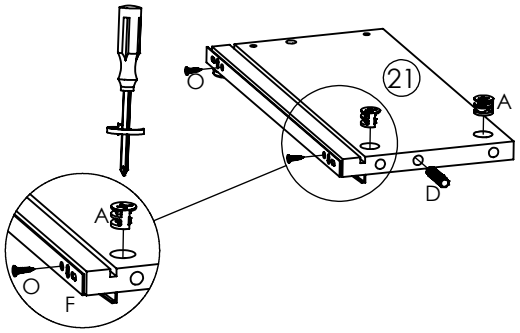

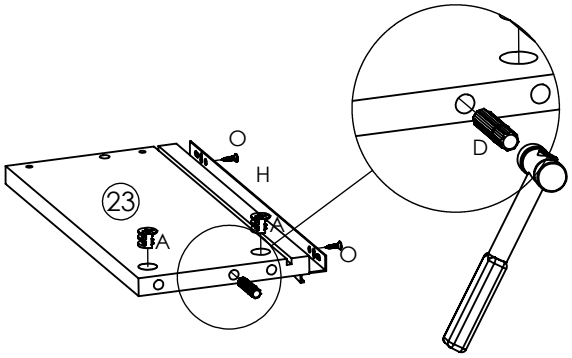

Ø15x12 MM	Ø8x32 MM	L=300 MM	L=300 MM	Ø6x13MM
A x 4	D x 2	F x 1	H x 1	O x 4

10

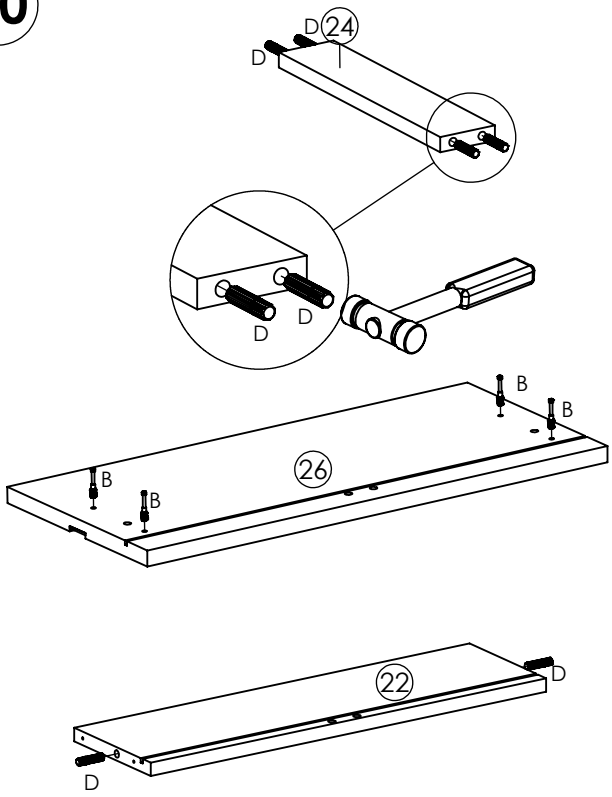

Ø6x32 MM	Ø8x32 MM
B x 4	D x 6

11

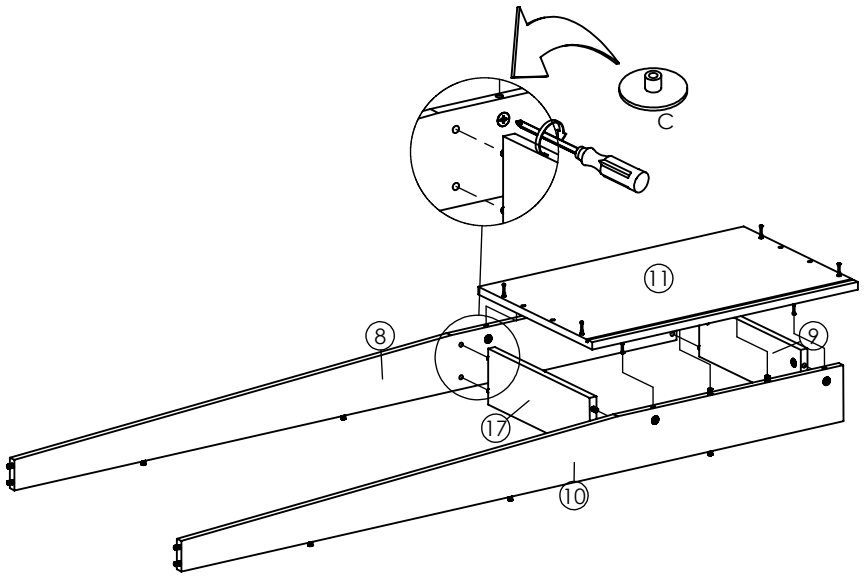

Ø18x5 MM
C x 6

12

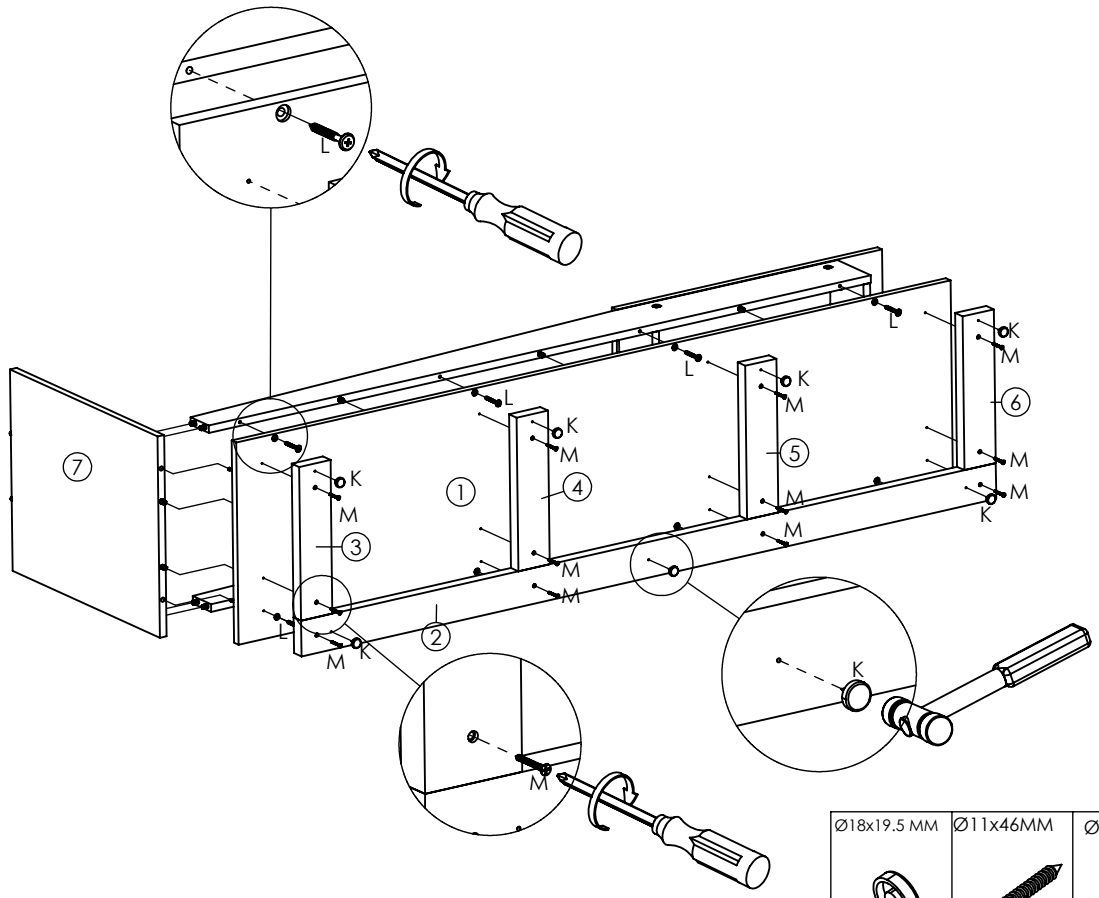

Ø18x19.5 MM	Ø11x46MM	Ø7x32 MM
K x 7	L x 8	M x 12

13

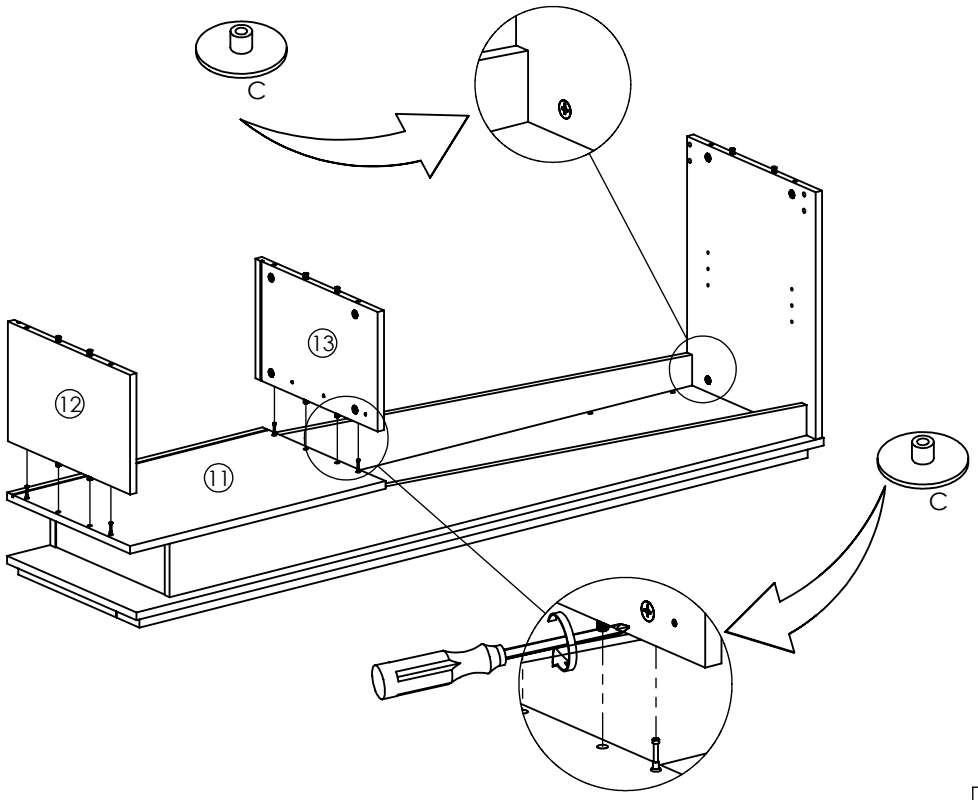

Ø18x5 MM
C x 4

14

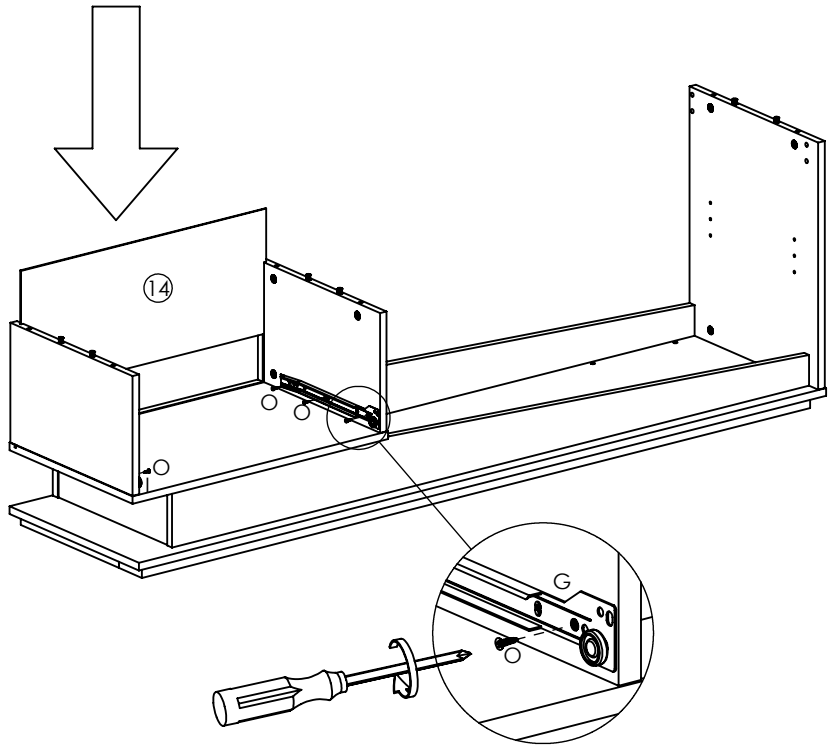

L=300 MM	L=300 MM	Ø6x13MM
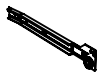		
G x 1	I x 1	O x 6

15

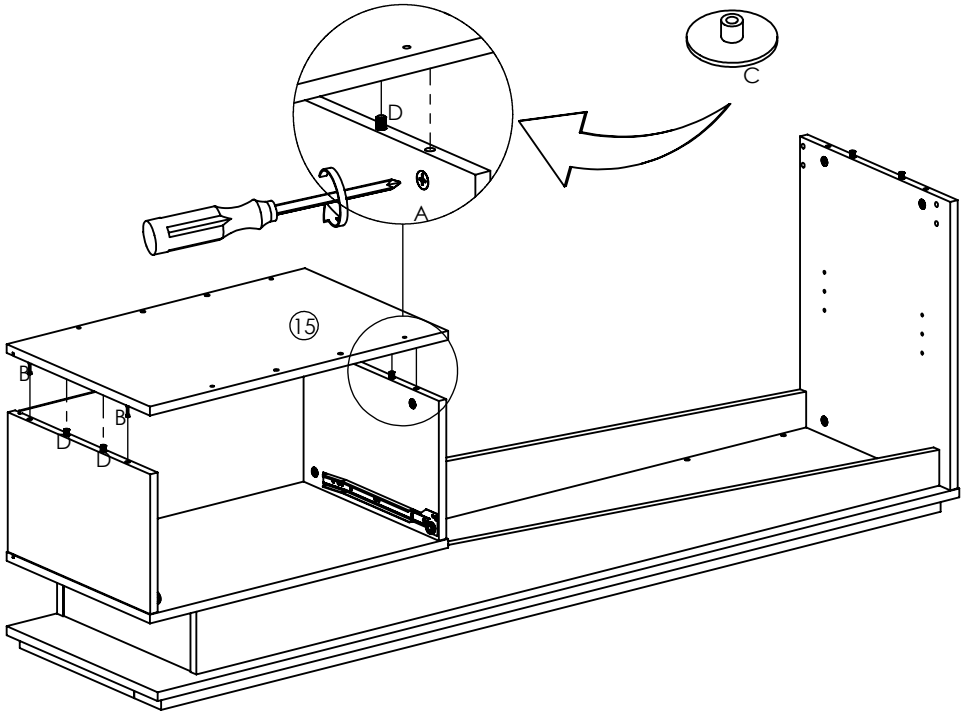

Ø18x5 MM

C x 4

16

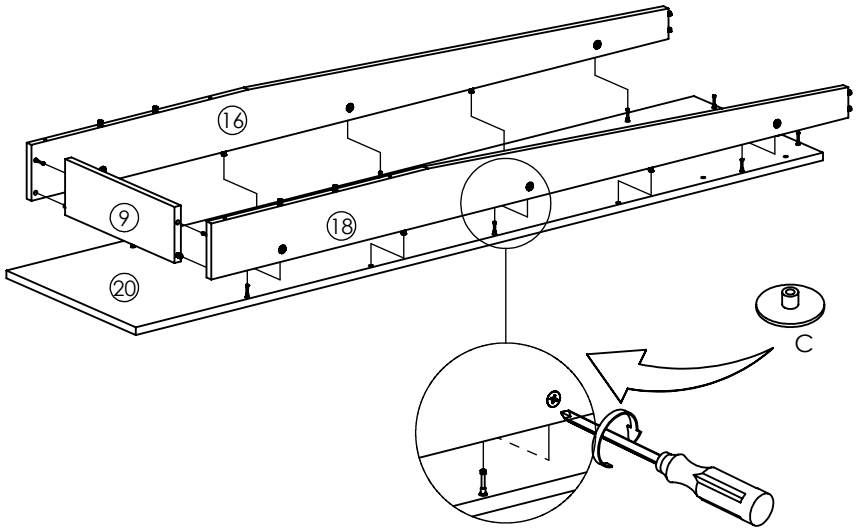

Ø18x5 MM

C x 8

17

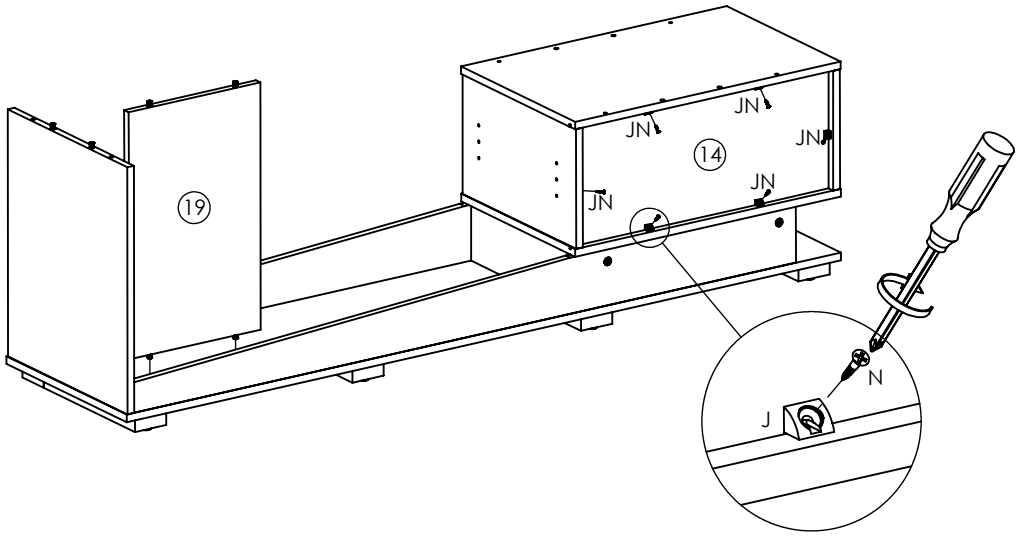

14x13x9 MM	Ø5x16 MM
	
J x 6	N x 6

18

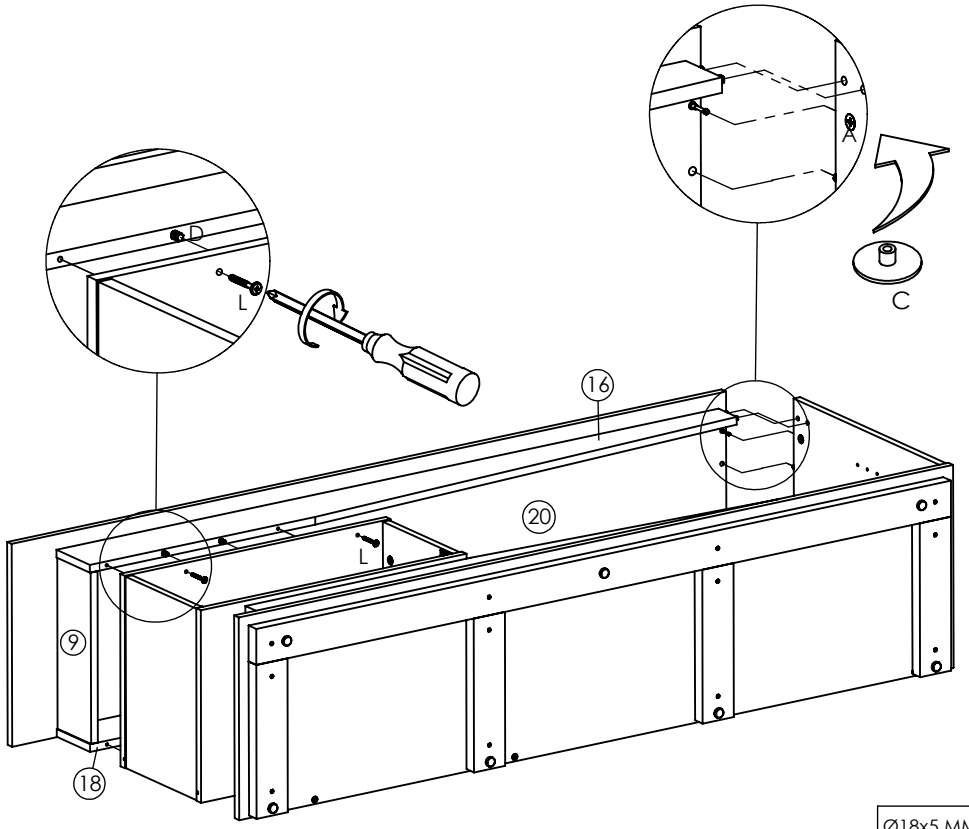

Ø18x5 MM	Ø11x46MM
C x 2	L x 4

19

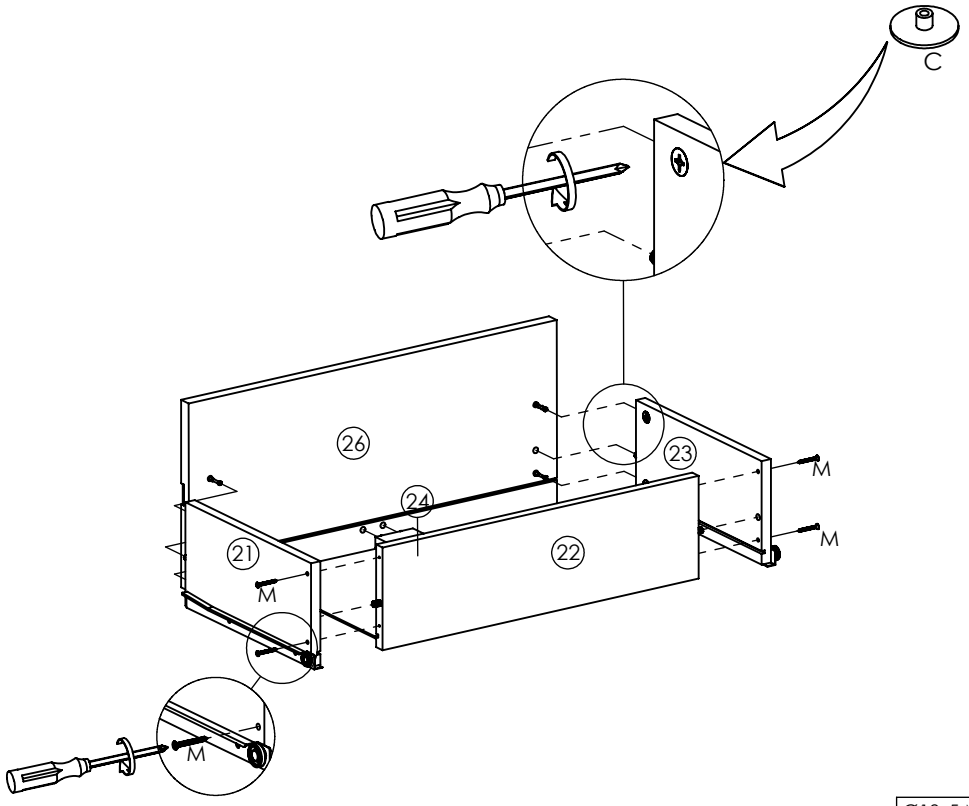

Ø18x5 MM	Ø7x32 MM
C x 4	M x 4

20

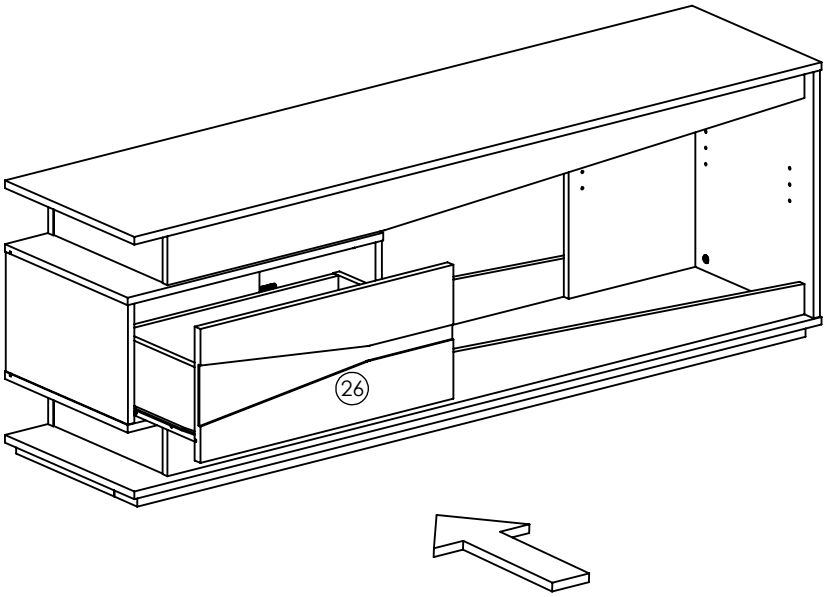

21

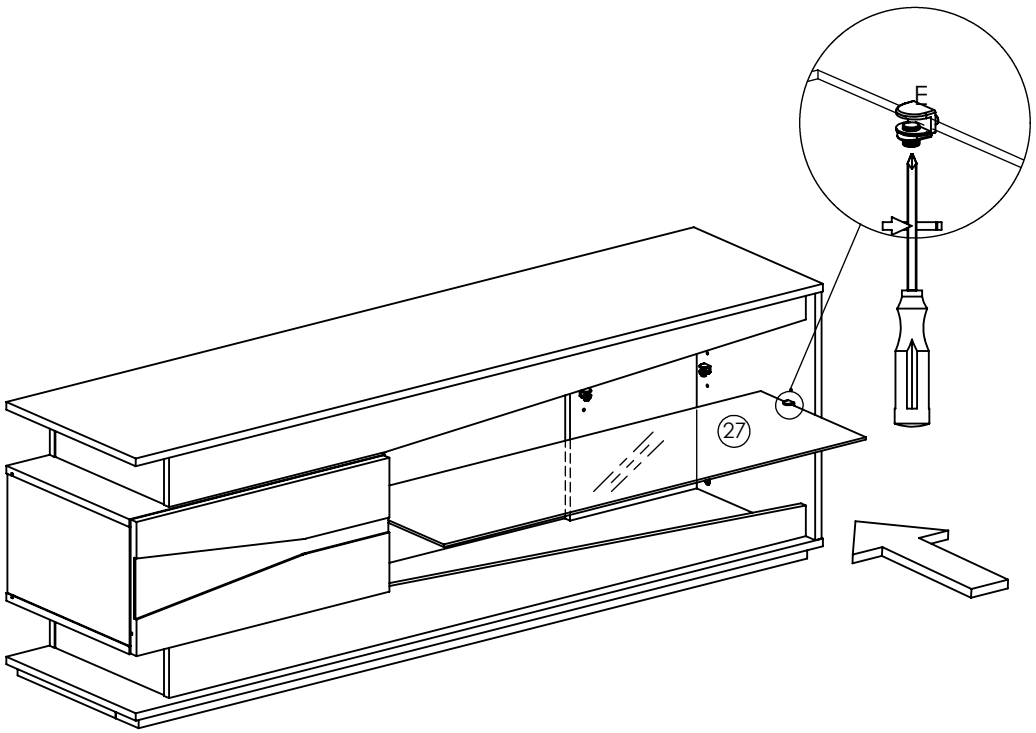

22

Recommended Maximum Weight

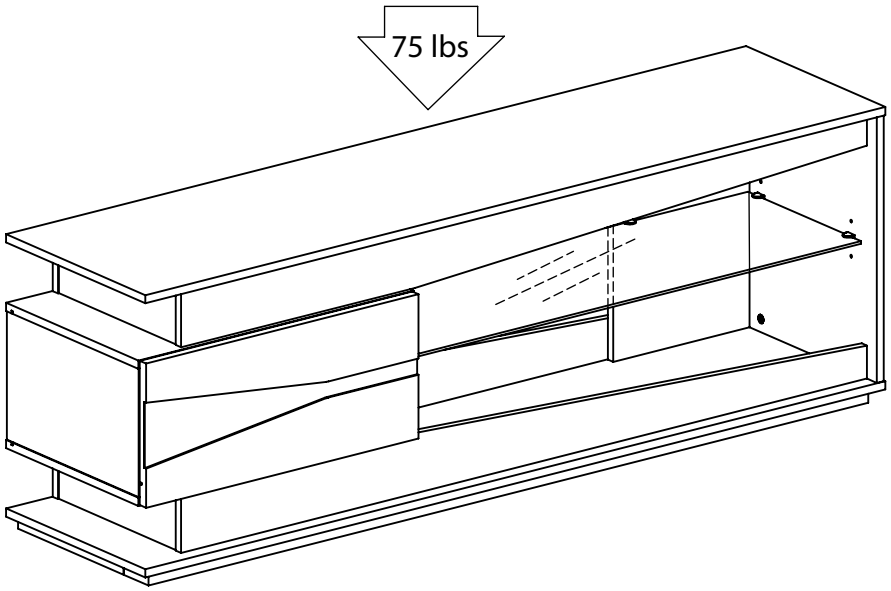

WARNING:

>This unit has been designed to support the maximum loads shown.
Exceeding these load limits could cause sagging, instability, product collapse, and/or serious injury.

>DO NOT allow children to climb on unit.