FVR7296

Furinno TV / Entertainment Stand

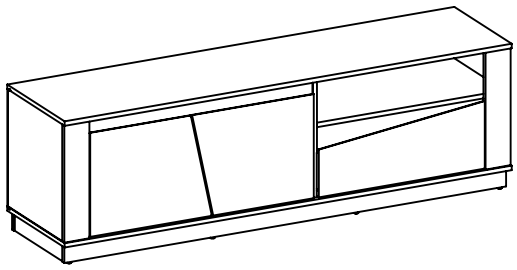

www.furinno.com

NEED HELP? For replacement requests or product inquiries, please contact our Customer Service Team by emailing us at **support@furinno.com**. Thank you for selecting Furinno!



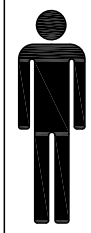

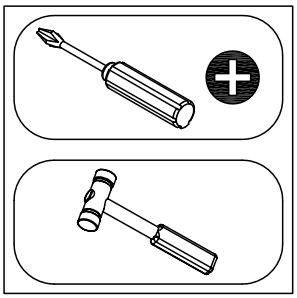

USEFUL HINTS BEFORE YOU START:

1. Read each step carefully before starting.
2. It is important that each step is performed in correct order to avoid difficulties.
3. Identify, sort and count the parts before assembly.
4. Assemble your furniture on packaging cardboard to prevent scratch or damage.
5. Clean the product with mild cleanser using soft damped cloth. Do not use harsh or abrasive cleanser.
6. Using uncompatible hardware might cause damage to product.

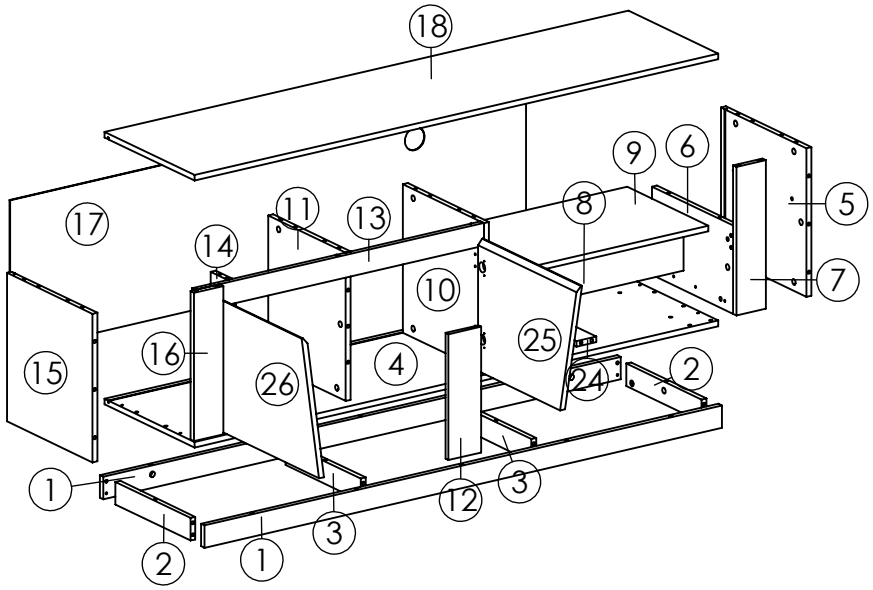

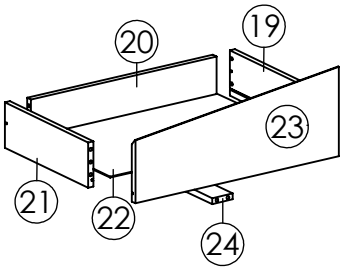

Ø15x12 MM Ax35	Ø6.5x36.5 MM Bx35	Ø18x5 MM Cx35	Ø8x32mm Dx83	14x13x9 MM Ex12	Ø14.5x19.5 MM Fx8	L=350 MM Gx1	L=350 MM Hx1
L=350 MM Ix1	L=350 MM Jx1	85x50x21 MM Kx2	82x50x21 MM Lx2	Ø7x32 MM Mx2	Ø6x13 MM Nx26	Ø5x16 MM Ox12	L=4 MM Px1

1

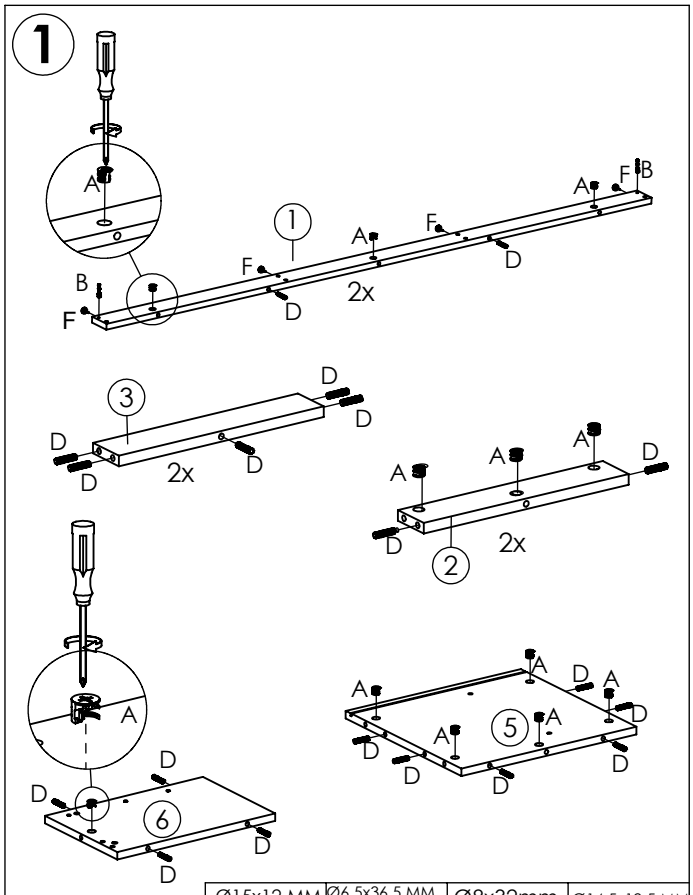

Ø15x12 MM	Ø6.5x36.5 MM	Ø8x32mm	Ø14.5x19.5 MM
Ax18	Bx4	Dx28	Fx8

2

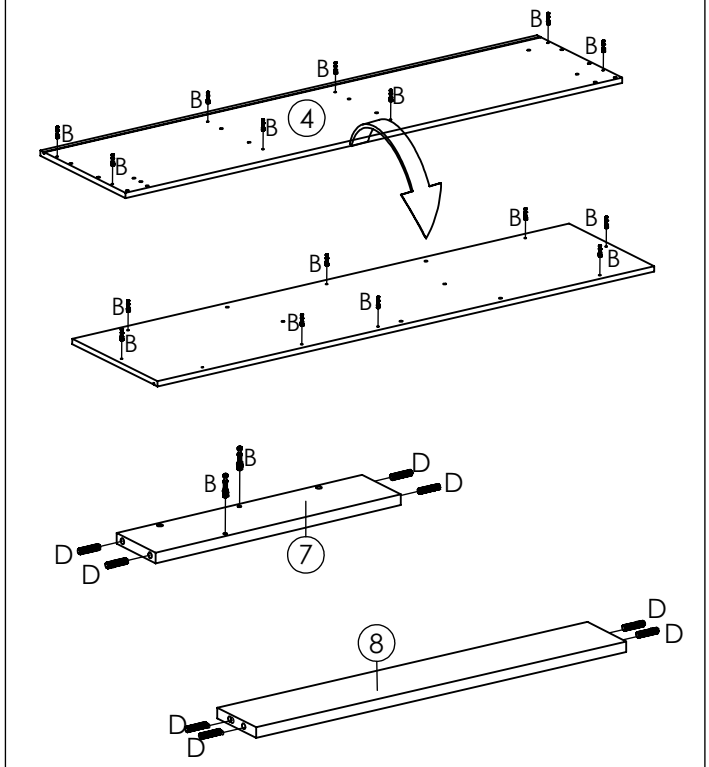

Ø6.5x36.5 MM	Ø8x32mm
Bx18	Dx8

3

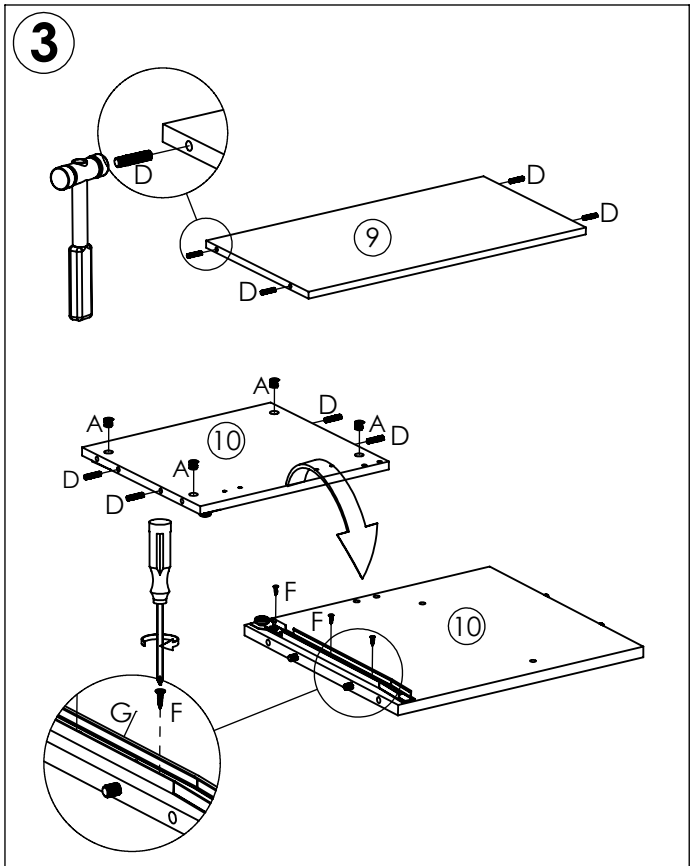

Ø15x12 MM	Ø8x32mm	L=350 MM	Ø6x13 MM
Ax4	Dx8	Gx1	Nx3

4

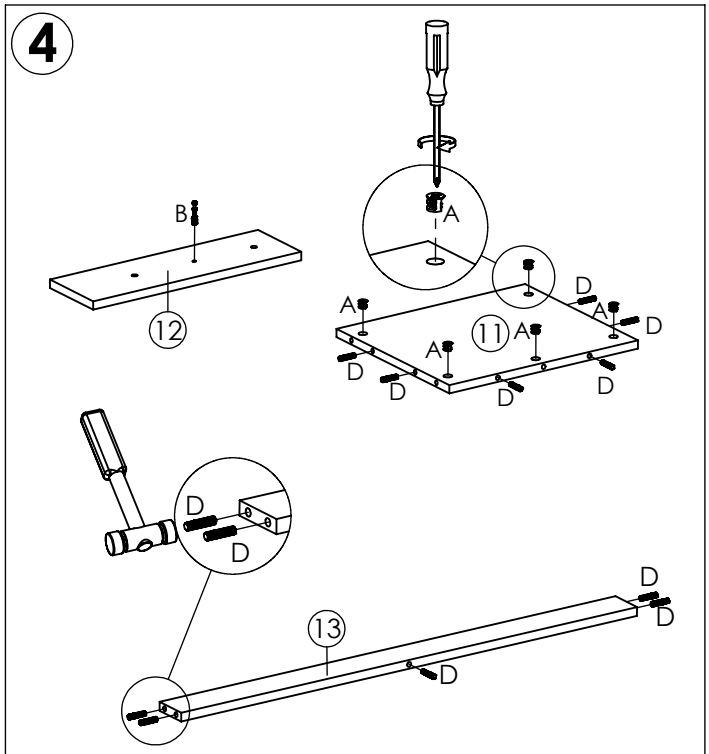

Ø15x12 MM	Ø6.5x36.5 MM	Ø8x32mm
Ax5	Bx1	Dx11

5

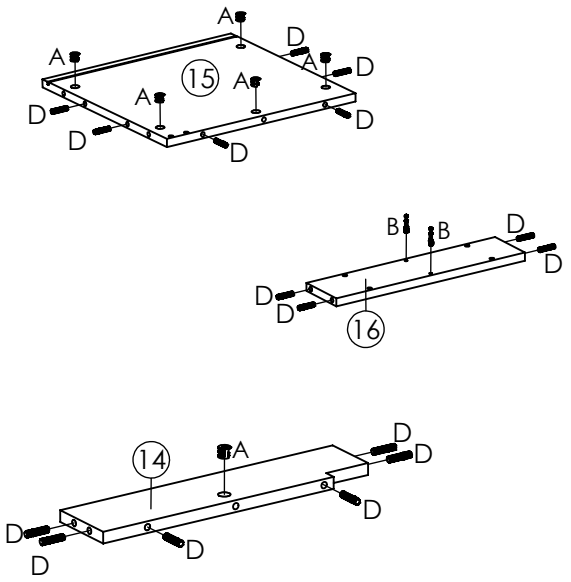

Ø15x12 MM	Ø6.5x36.5 MM	Ø8x32mm
Ax6	Bx2	Dx16

6

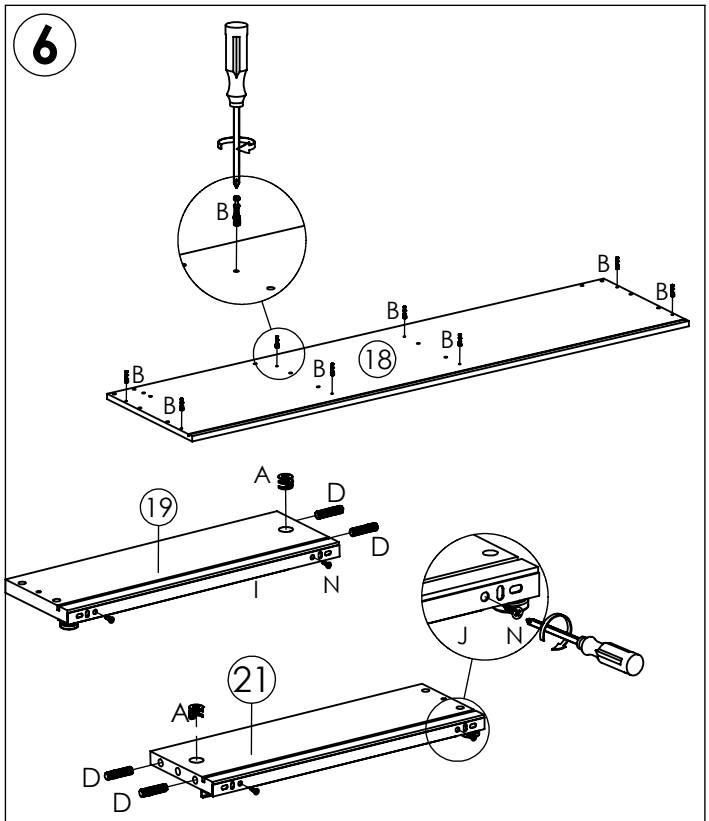

Ø15x12 MM	Ø6.5x36.5 MM	Ø8x32mm	L=350 MM	L=350 MM	Ø6x13 MM
Ax2	Bx8	Dx4	Ix1	Jx1	Nx4

7

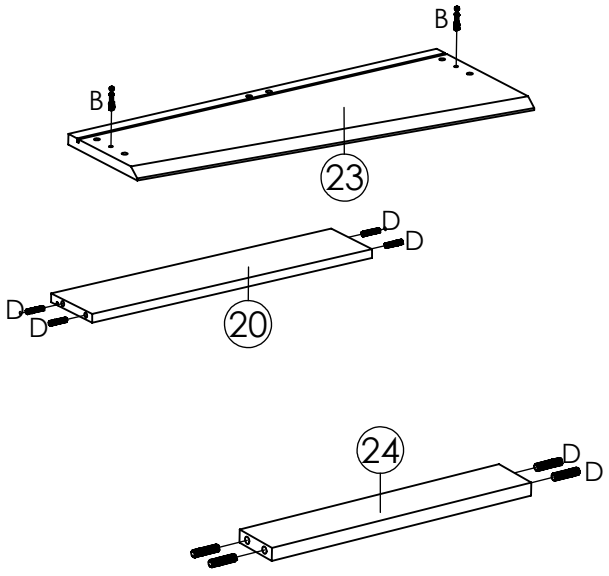

Ø6.5x36.5 MM	Ø8x32mm
Bx2	Dx8

8

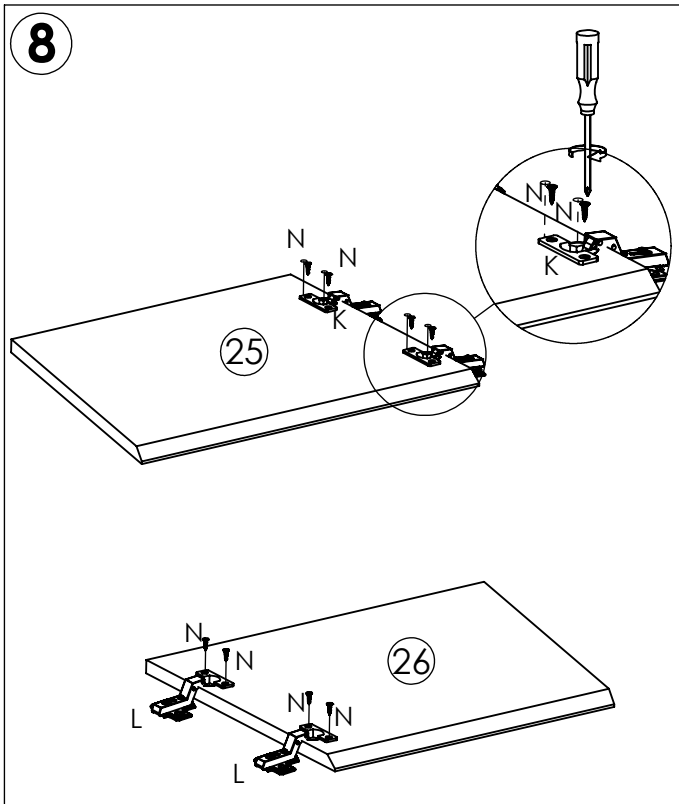

85x50x21 MM	82x50x21 MM	Ø6x13 MM
Kx2	Lx2	Nx8

9

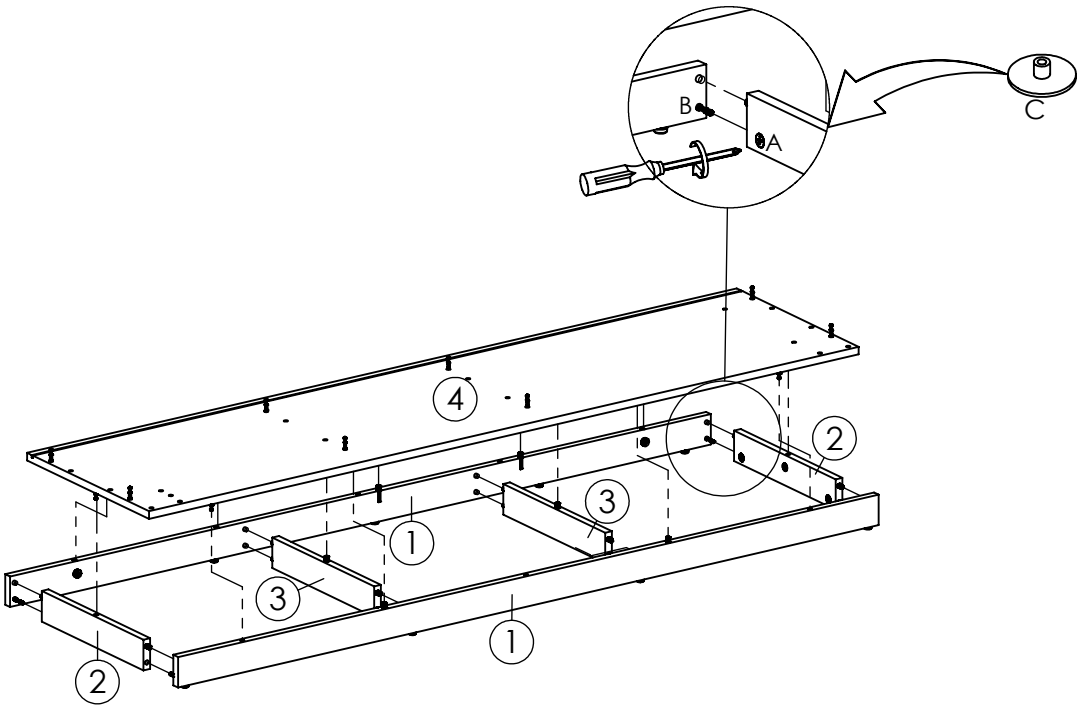

Ø18x5 MM
Cx12

10

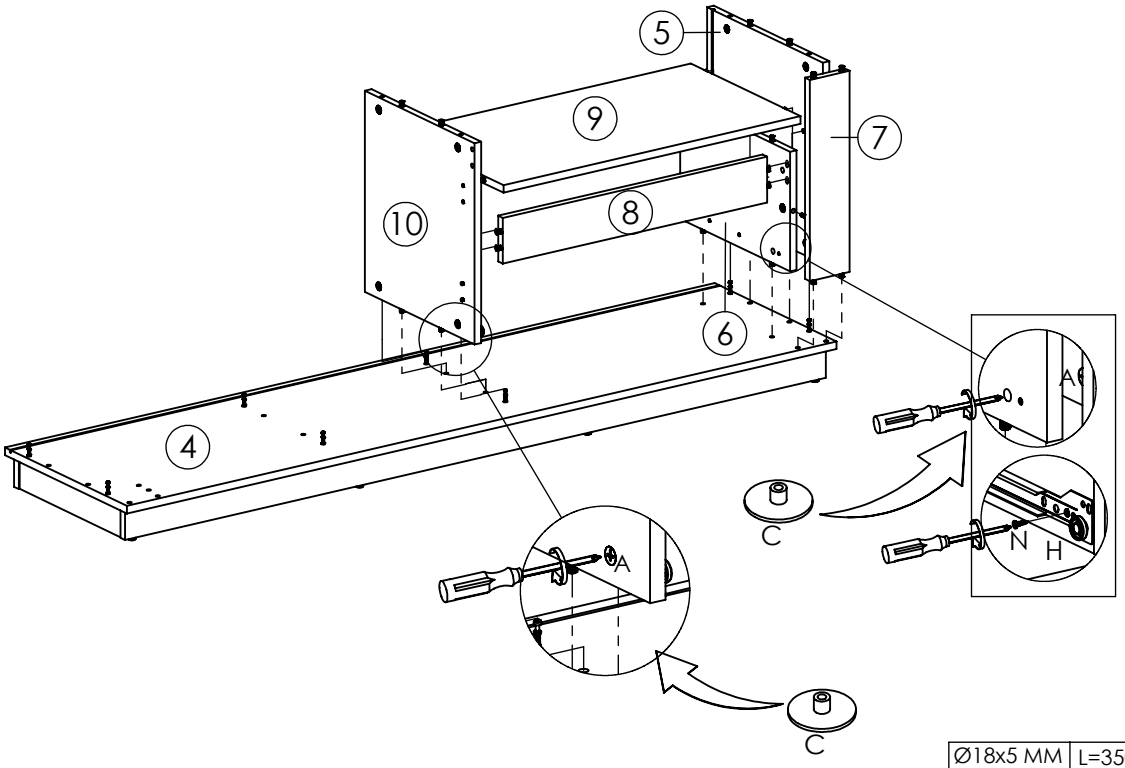

Ø18x5 MM	L=350 MM	Ø6x13 MM
Cx6	Hx1	Nx3

11

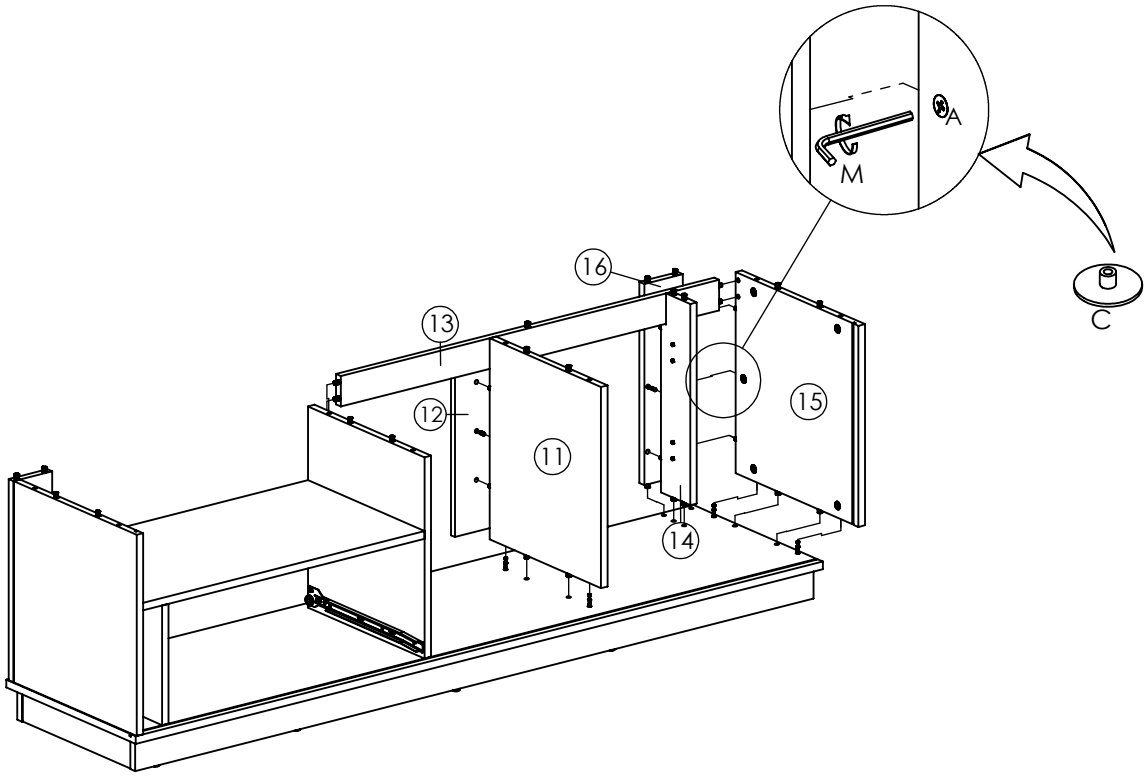

Ø18x5 MM	L=4 MM
 Cx7	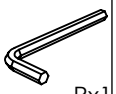 Px1

12

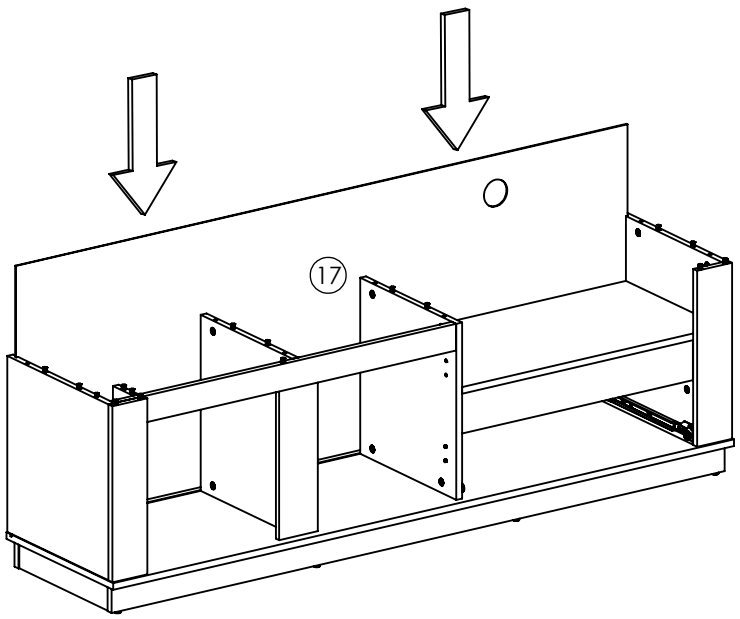

13

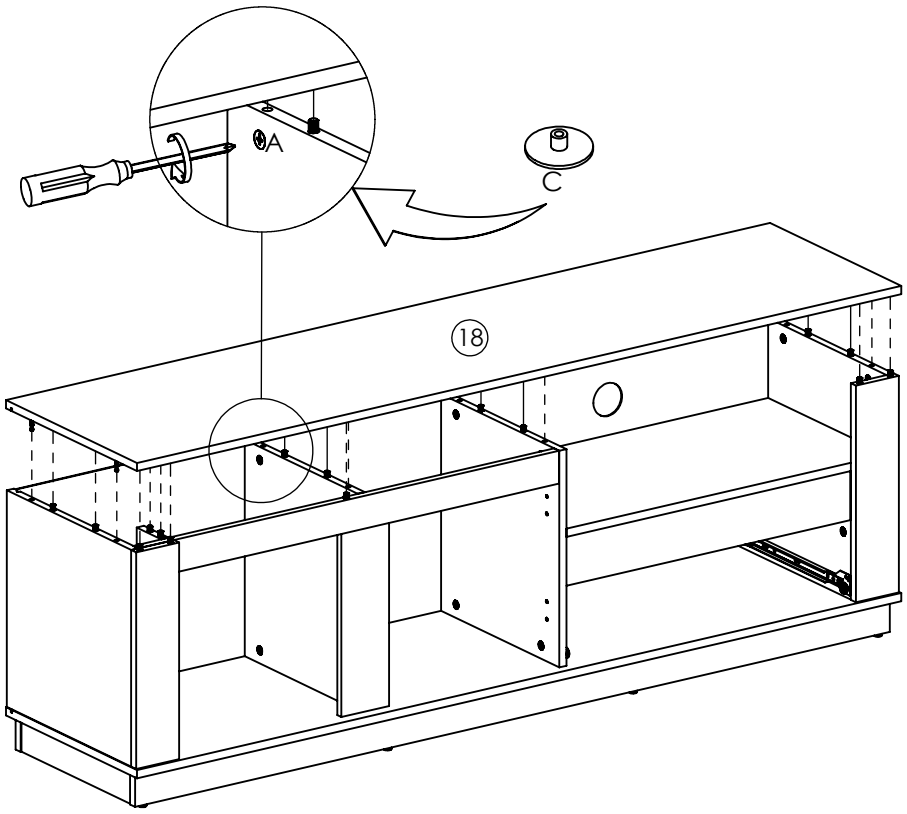

Ø18x5 MM

Cx8

14

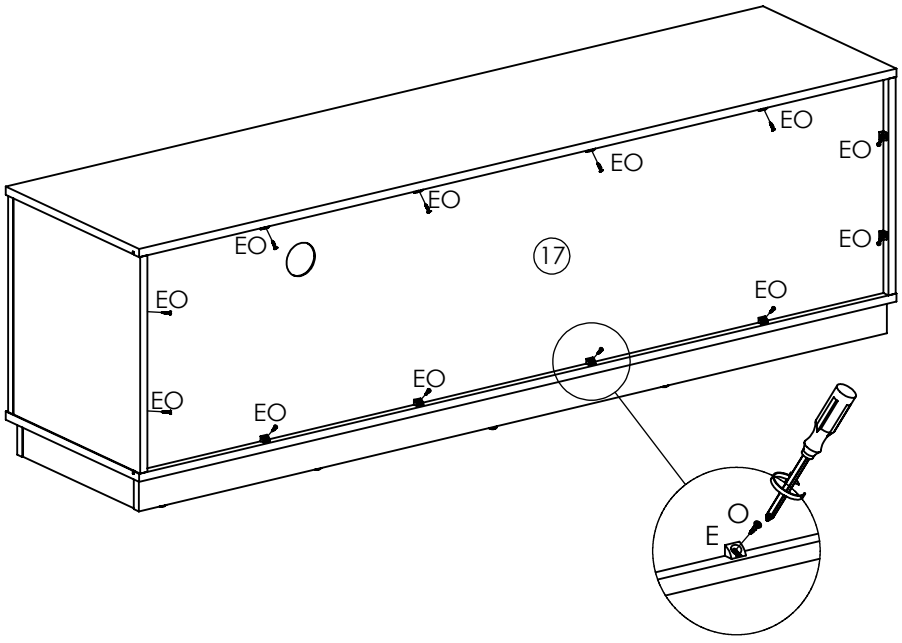

14x13x9 MM	Ø5x16 MM
	
Ex12	Ox12

15

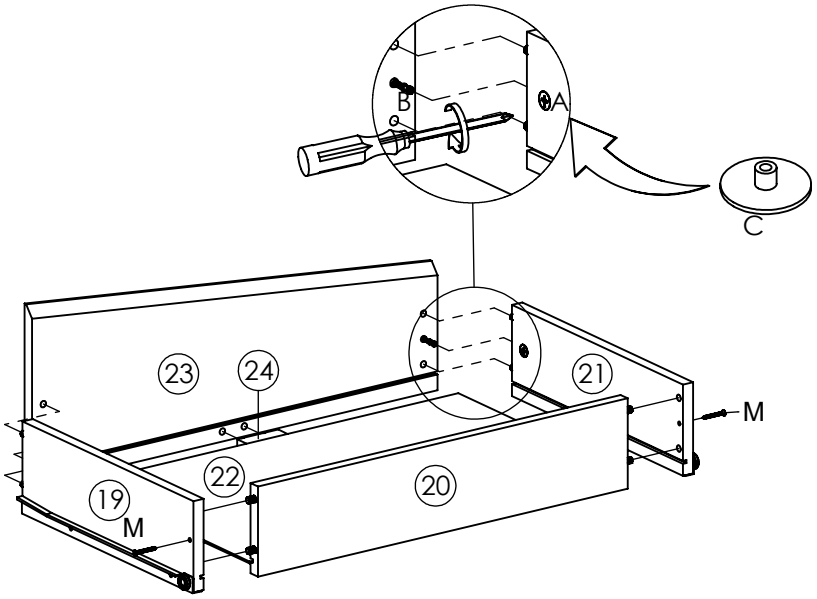

Ø18x5 MM	Ø7x32 MM
 Cx2	 Mx2

16

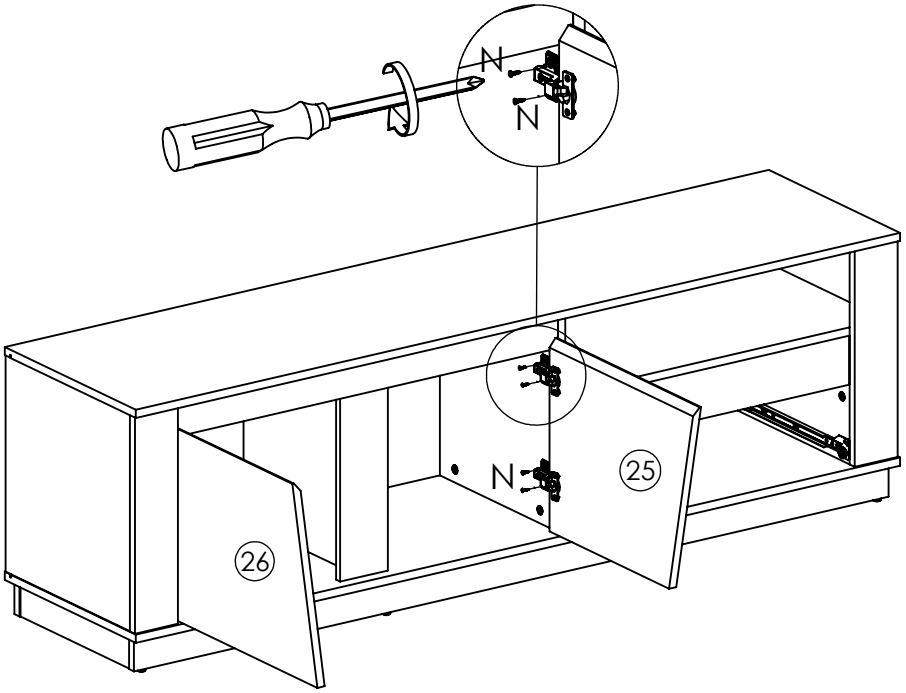

Ø6x13 MM
 Nx8

17

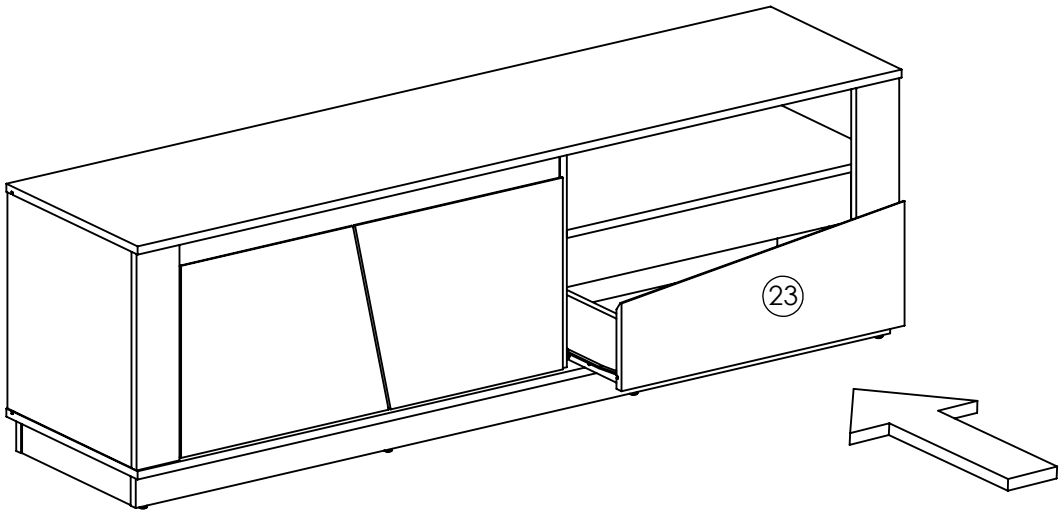

18

Recommended Maximum Weight

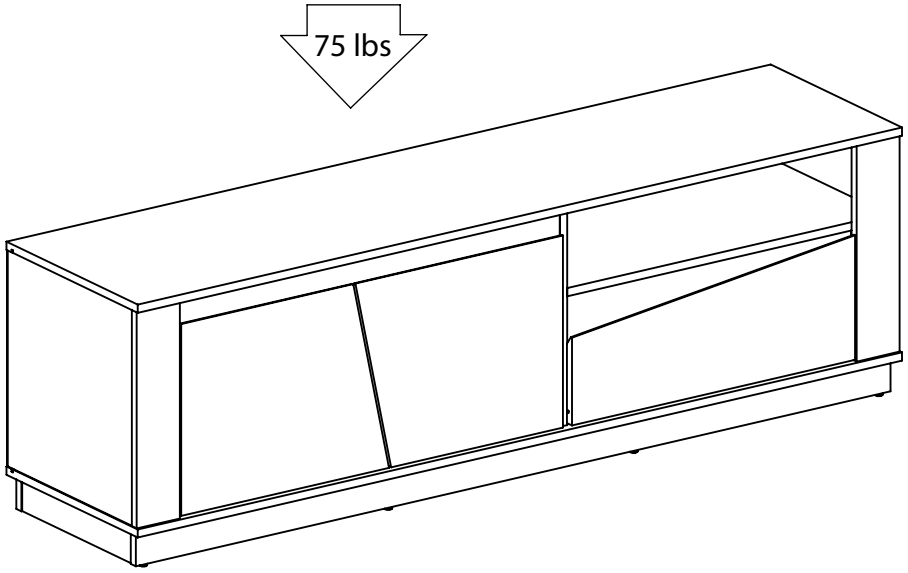

WARNING:

>This unit has been designed to support the maximum loads shown.
Exceeding these load limits could cause sagging, instability, product collapse, and/or serious injury.

>DO NOT allow children to climb on unit.