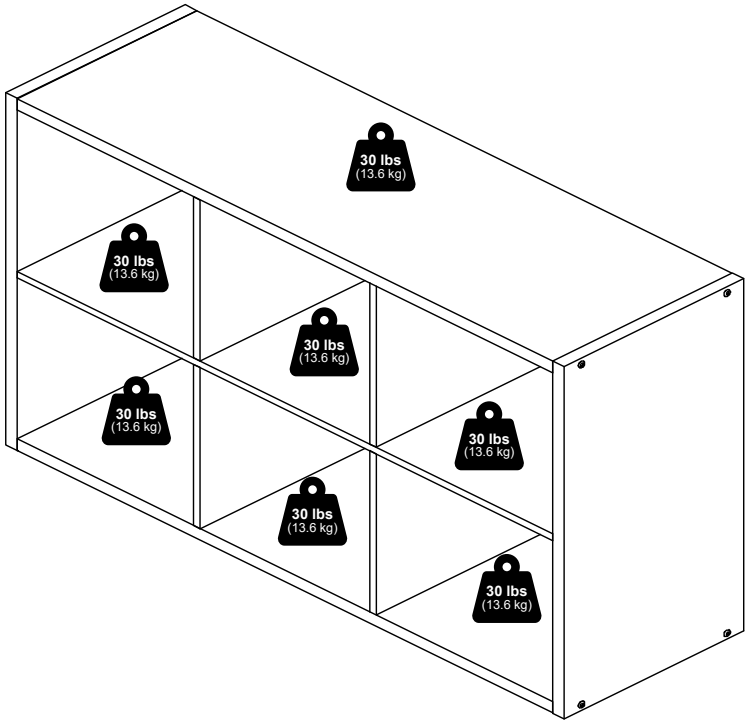




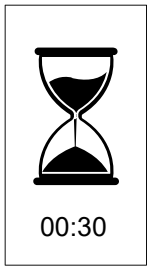





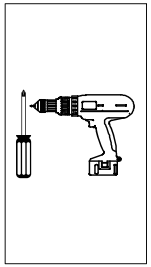

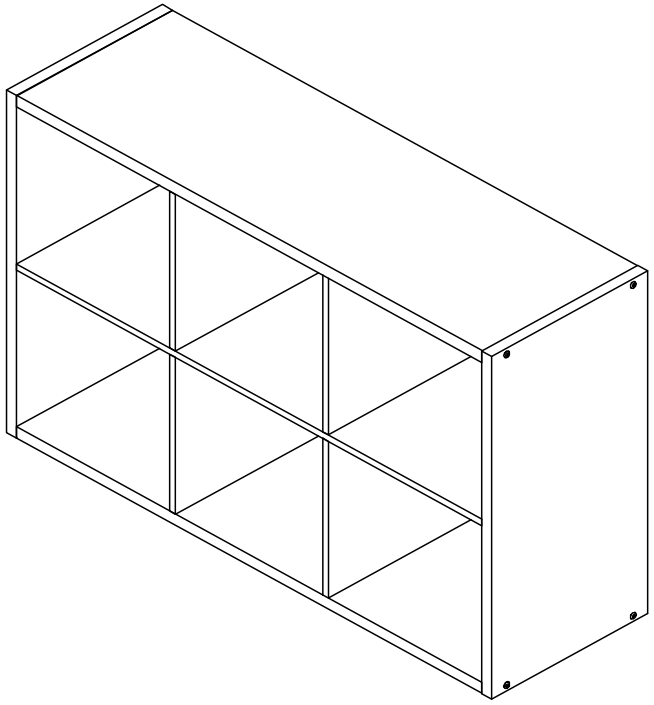

# MODEL: 25566



2556620251222

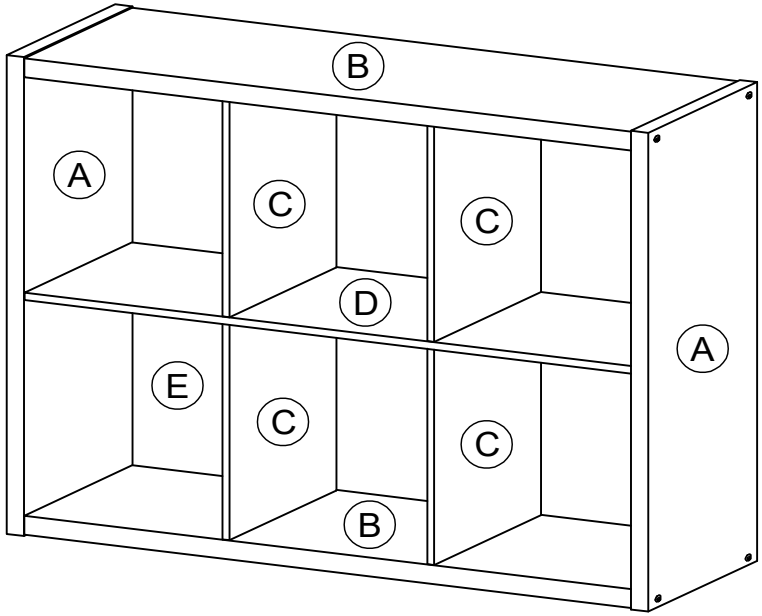


| | | |
|---|---|---|
| 1 x 1  | 2 x 8  M7 x 75mm | 3 x 12 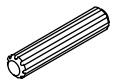 M6 x 40mm |
| 4 x 4  | 5 x 4 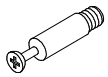 | 6 x 20  |
| 7 x 1 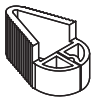 | 8 x 2  8a  8b #8 x 1" 8c 4 x 11 mm | |



6

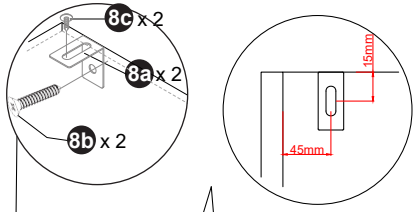





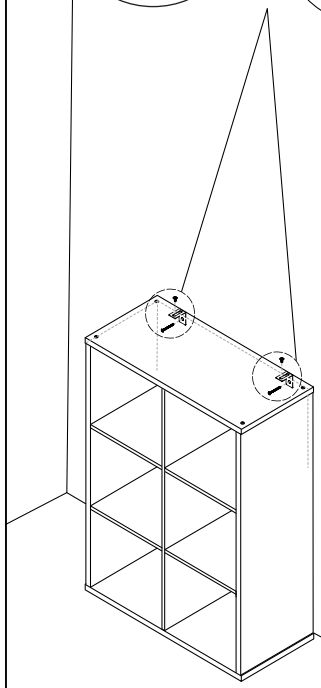

OR

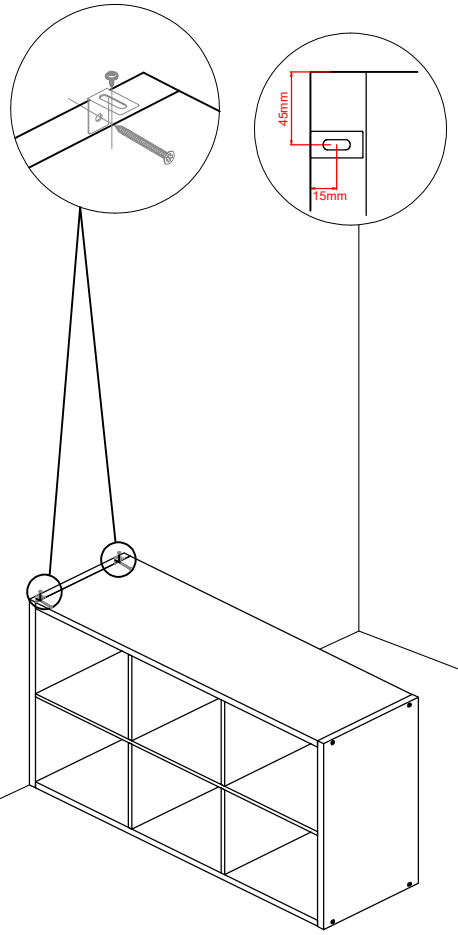




# 5

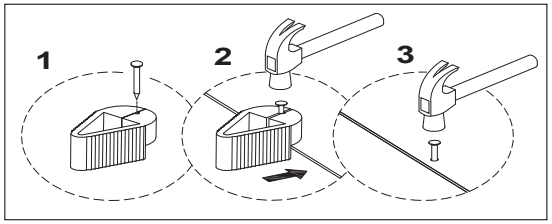


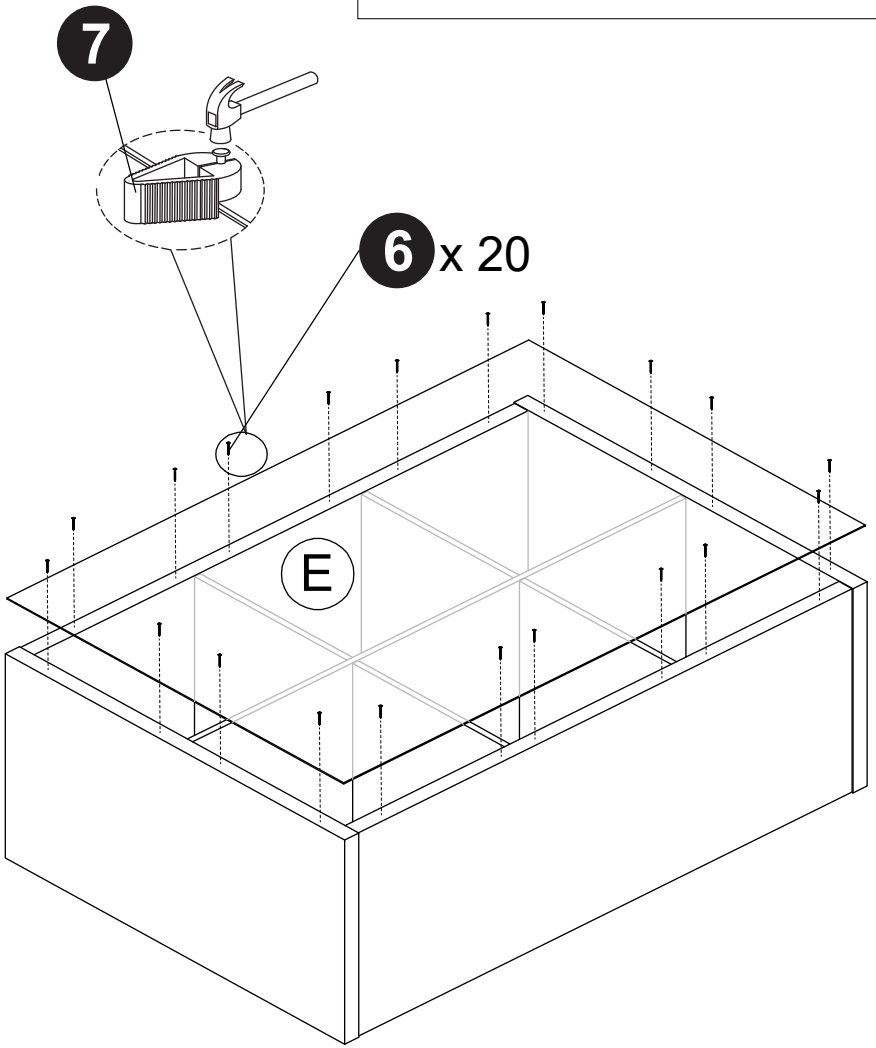




# 1

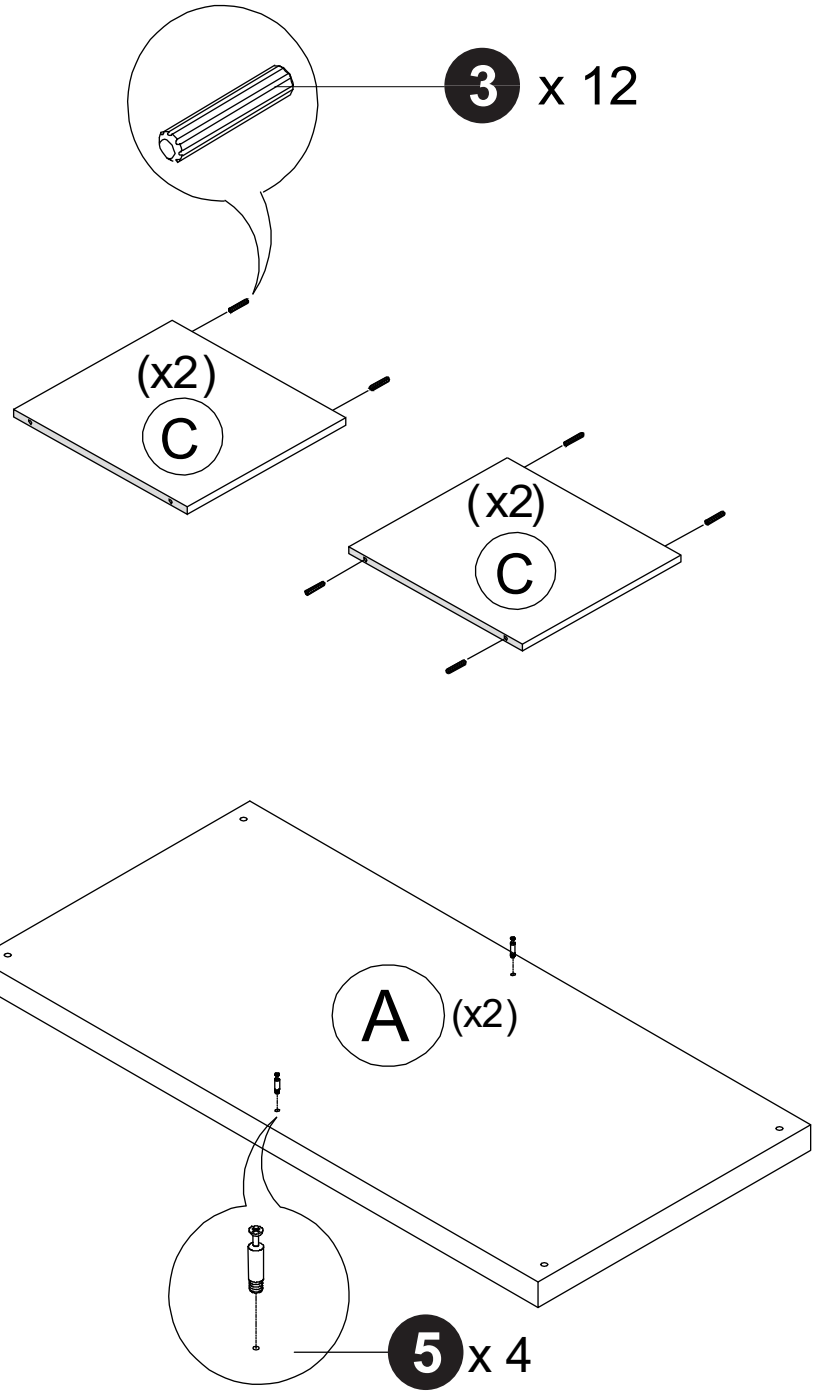

## 2

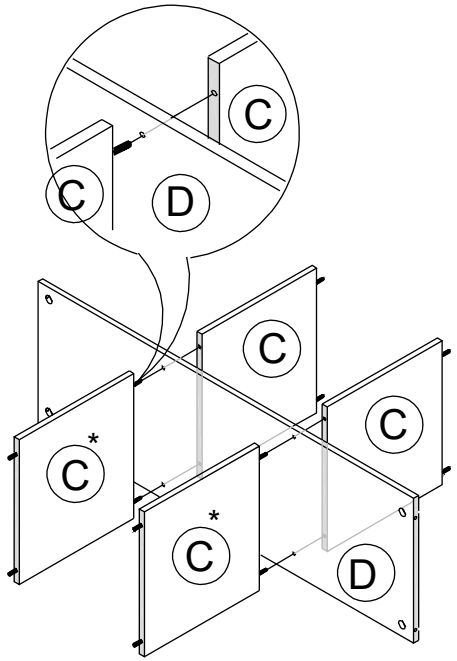


## 3

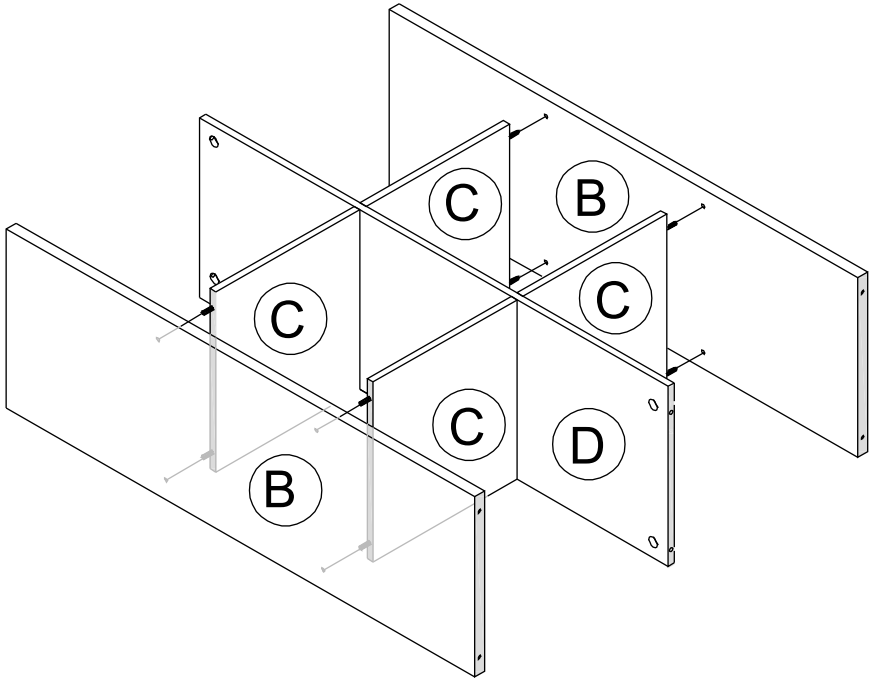




## 4

