5

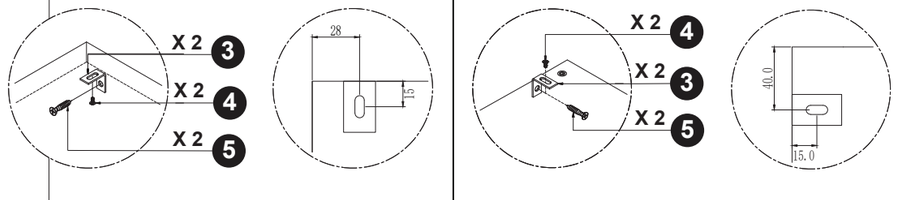

OR

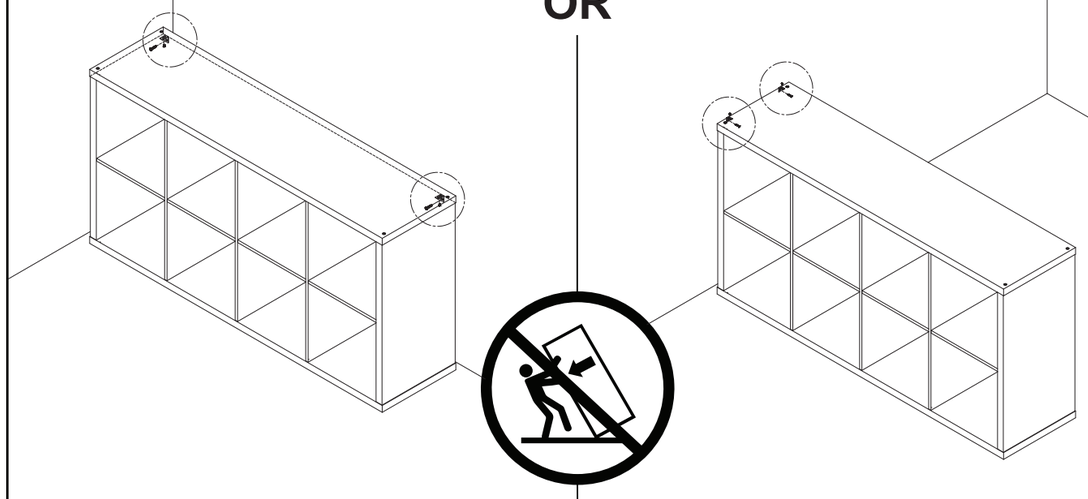

6

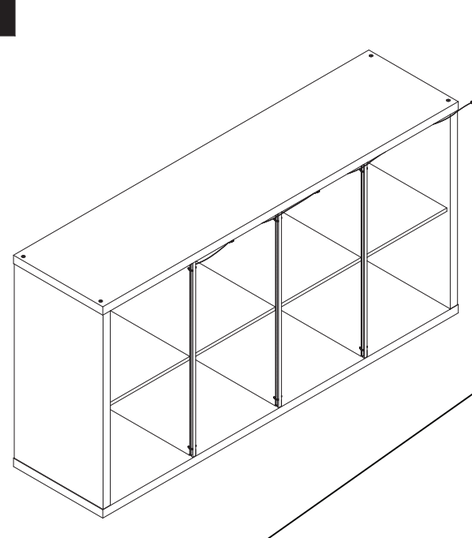

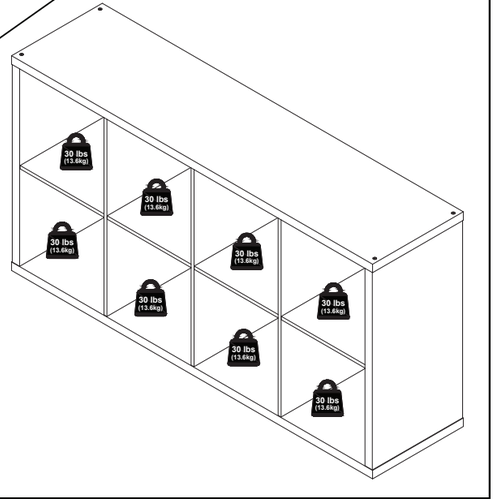





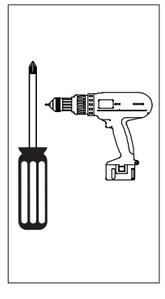

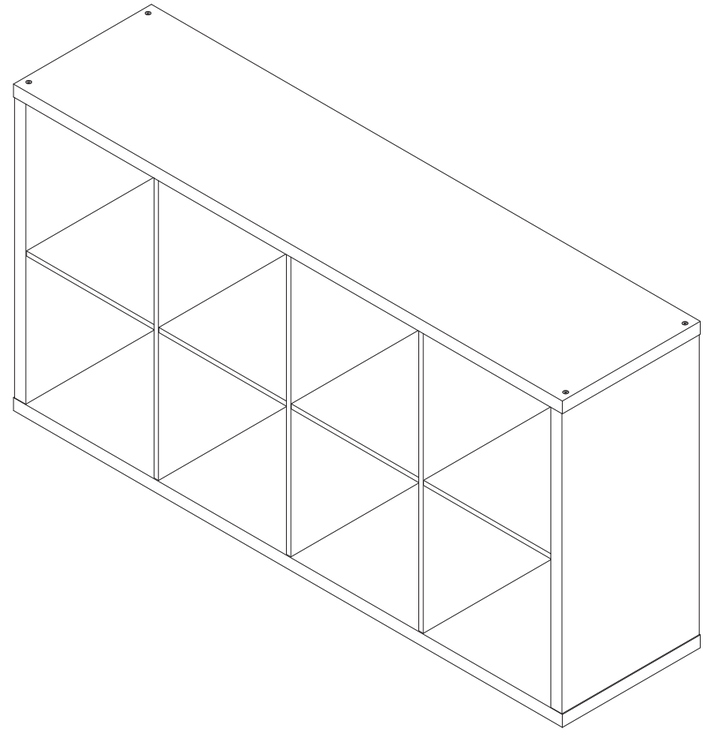

MODEL: LU25625

LU2562520251124

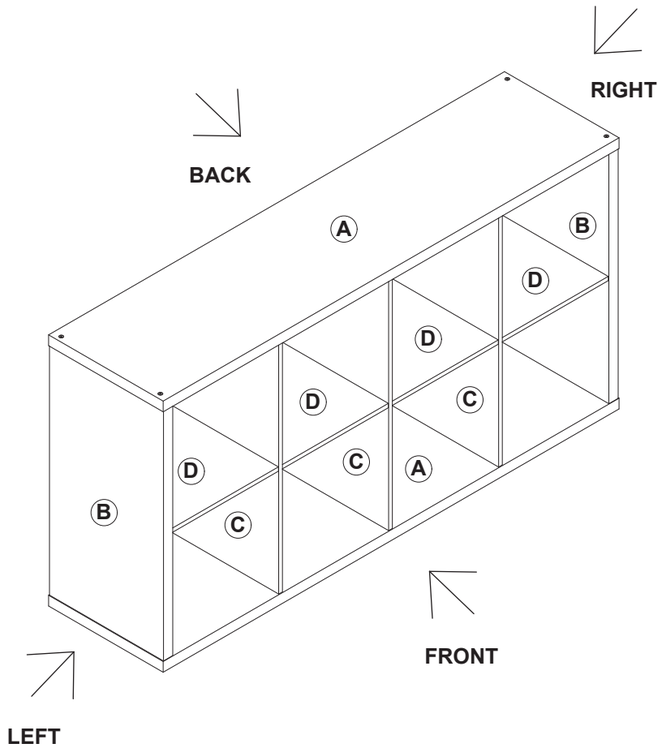

1 x 10 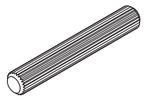 6 X 40MM	2 x 8 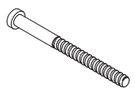 M7 X 84MM	3 x 2 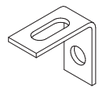
4 x 2  5 X 16MM	5 x 2  5 X 38MM	6 x 1  M4
7 x 12 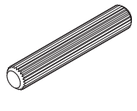 6 X 30MM	8 x 1 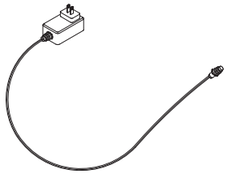	9 x 9 

1

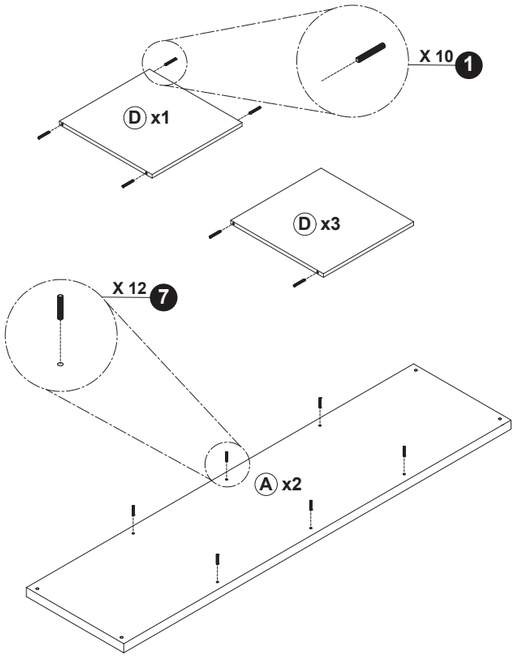

2

Note: Identify the front/back of each Panel D and install all in the same orientation.

Note: Panel D's front/back sides differ by dowel offset. Align the closer back side with the LED on Panel C.

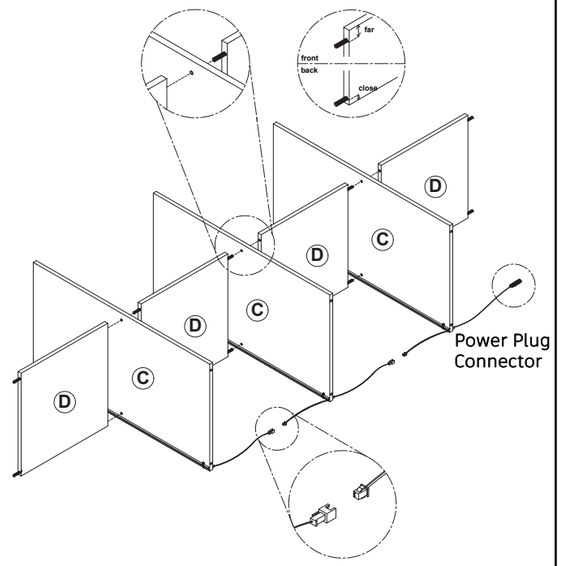

Panels with cable connectors must be installed face-to -face (male to female) for LED integration.

3

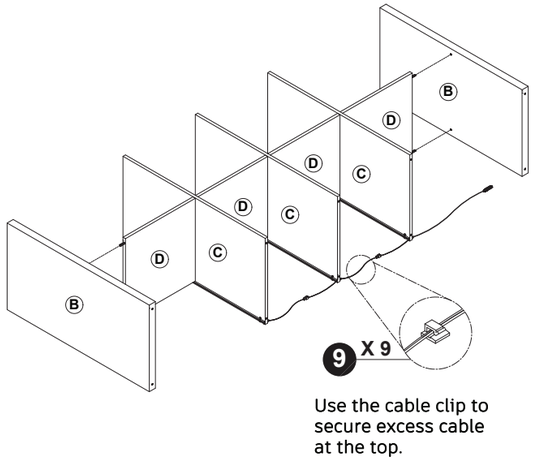

Use the cable clip to secure excess cable at the top.

4

