

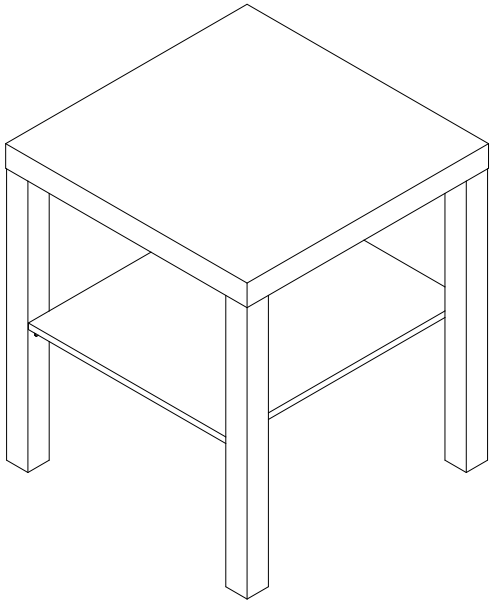

MODEL: LU26002

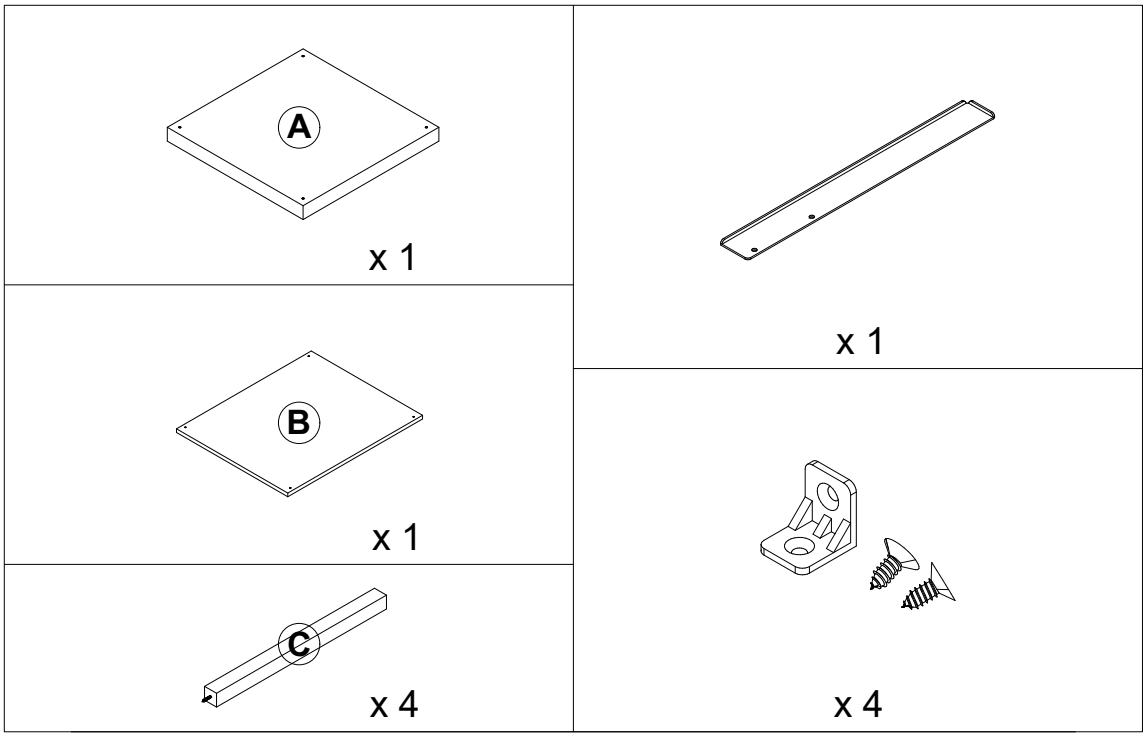

1

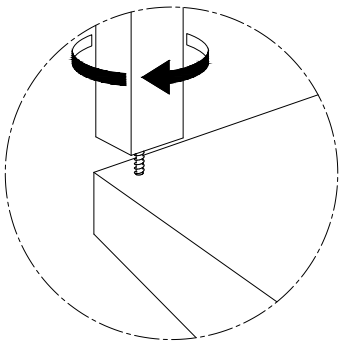

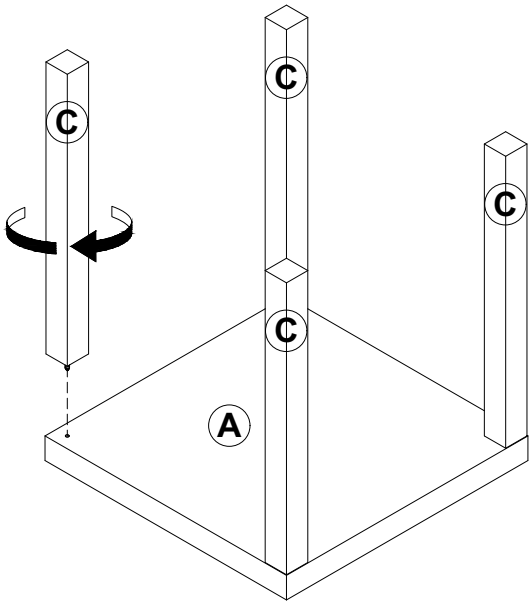

2

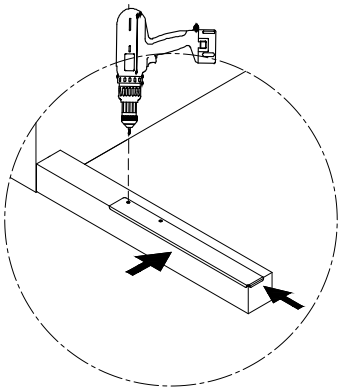

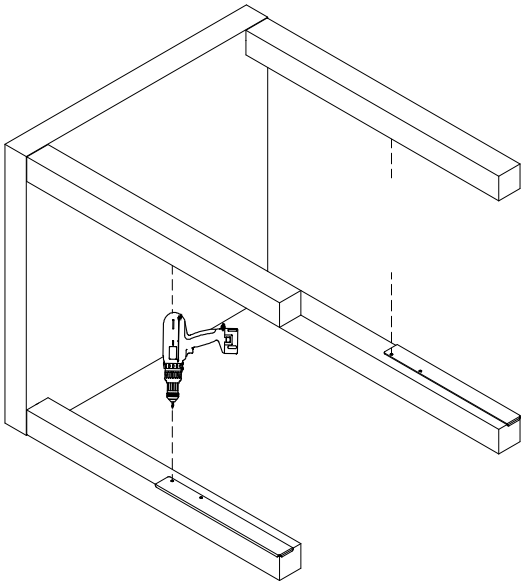

3

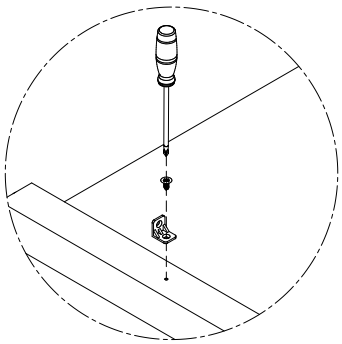

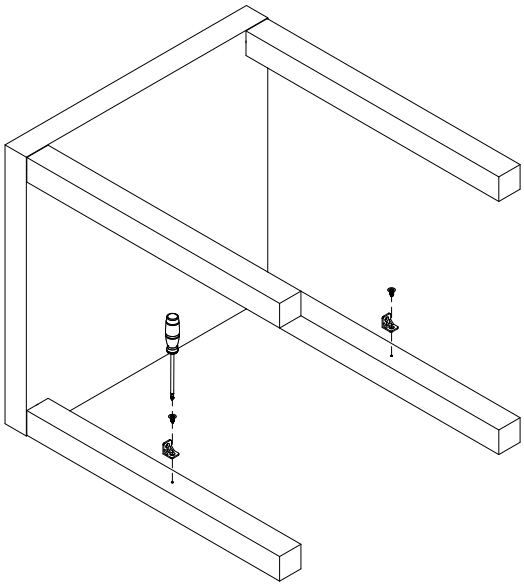

4

