

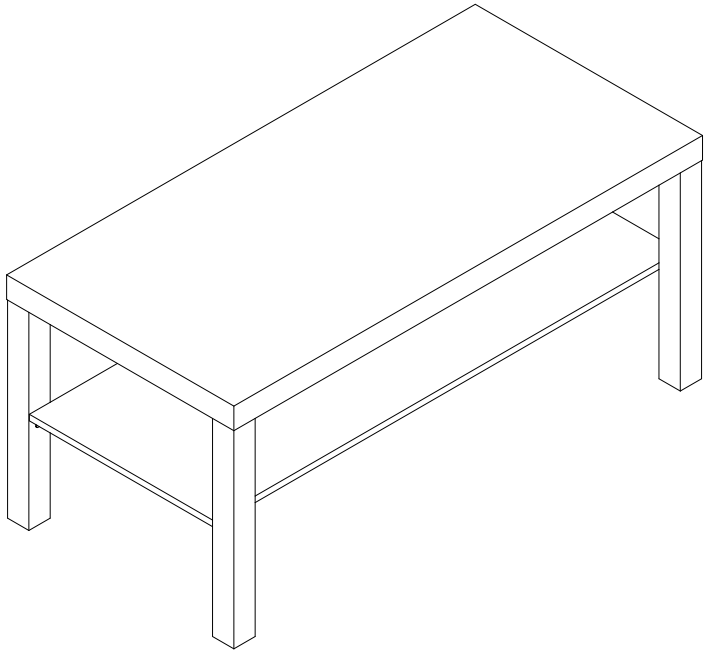

MODEL: LU26003

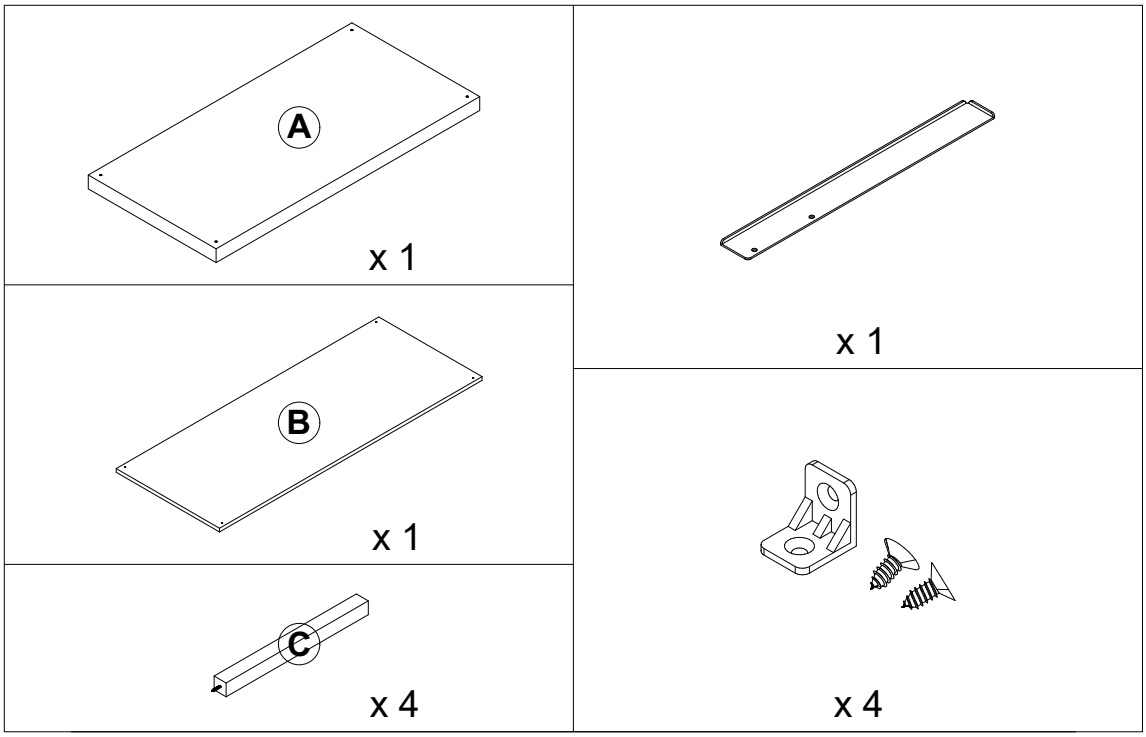

1

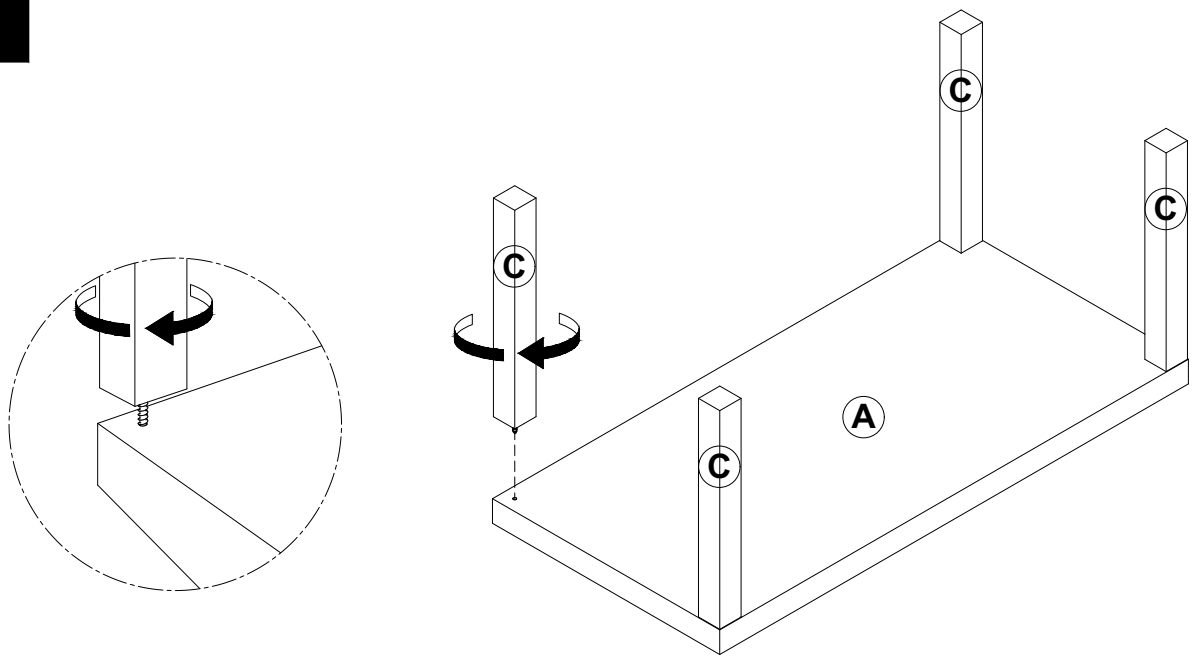

2

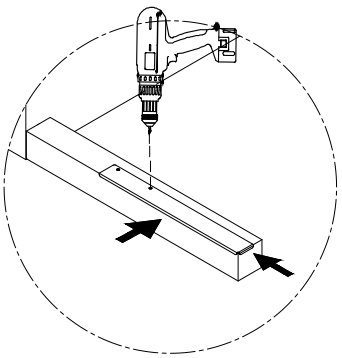

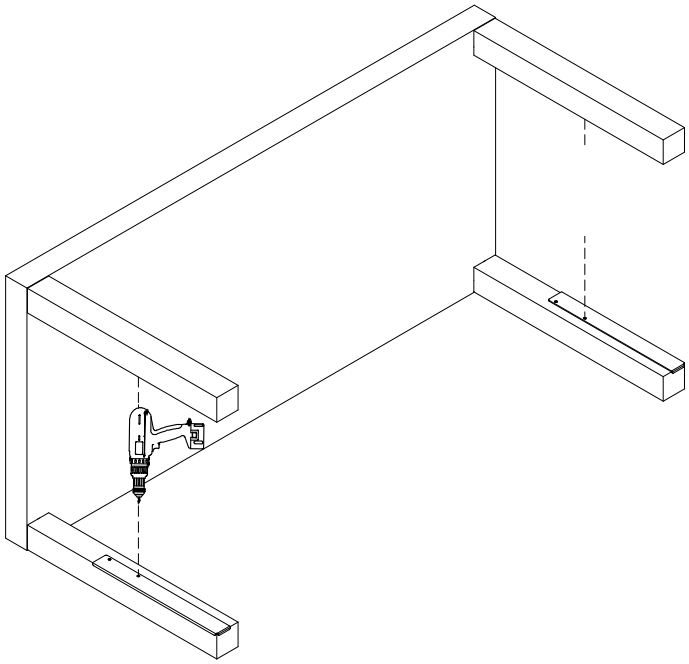

3

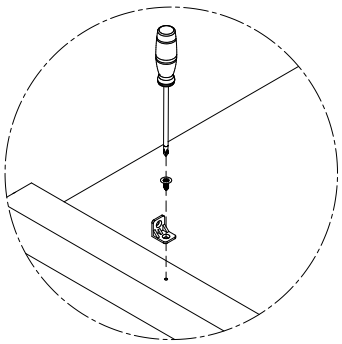

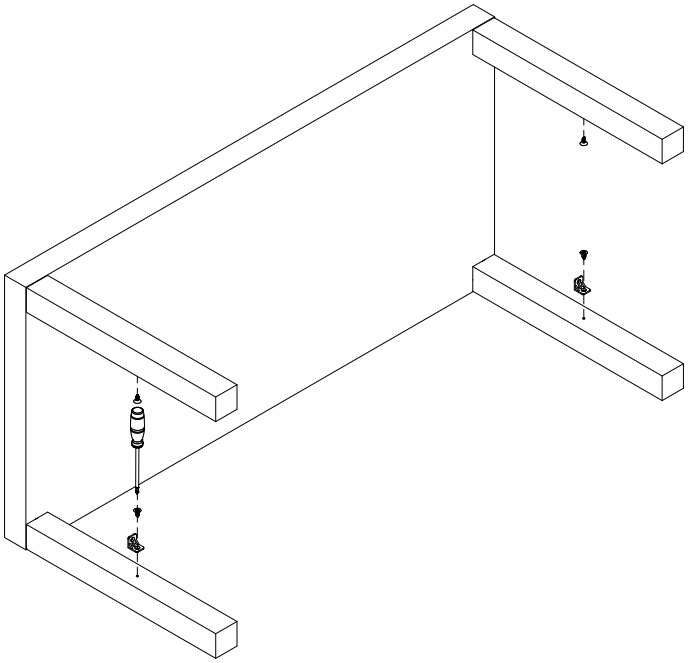

4

