ASSEMBLY INSTRUCTIONS

MODEL:4 TIER RACK 600

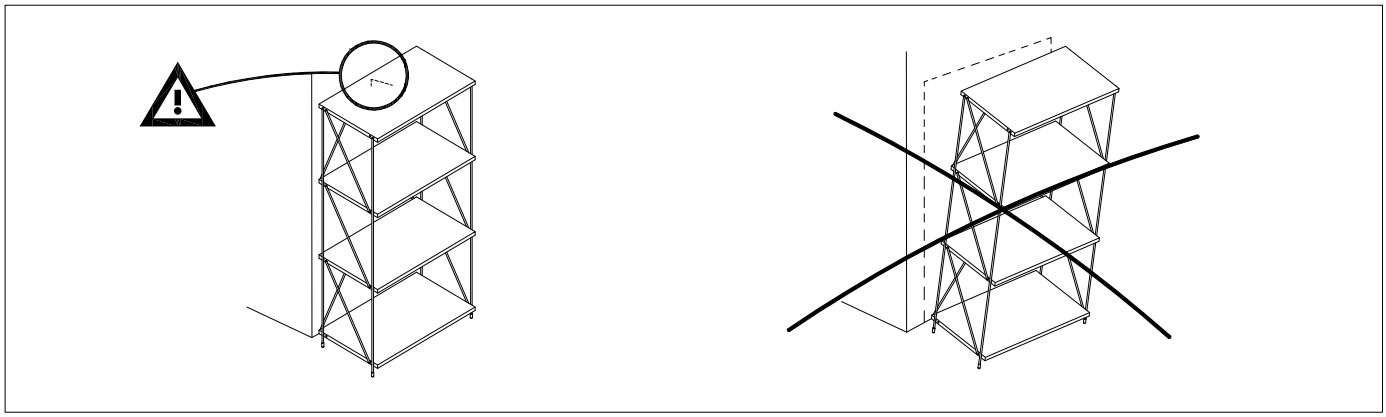

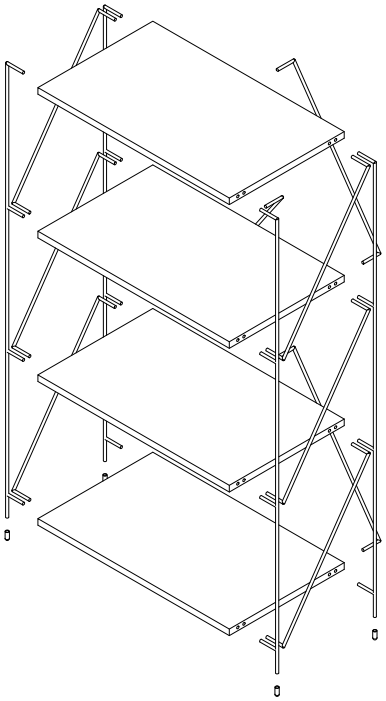

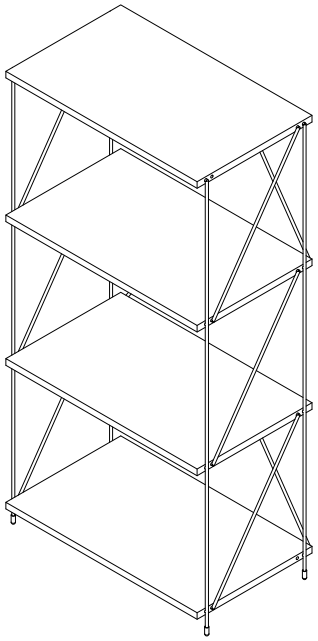

COMPLETED ASSEMBLY

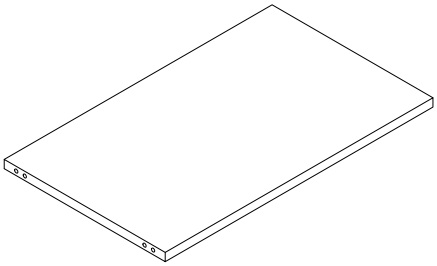

(1) *4 PCS*

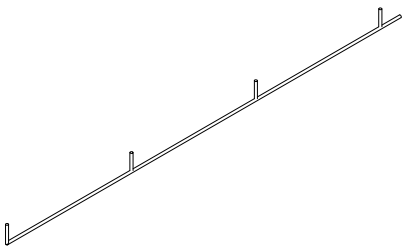

(2) *4 PCS*

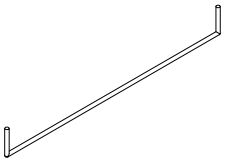

(3) *9 PCS*



(4) *4 PCS*

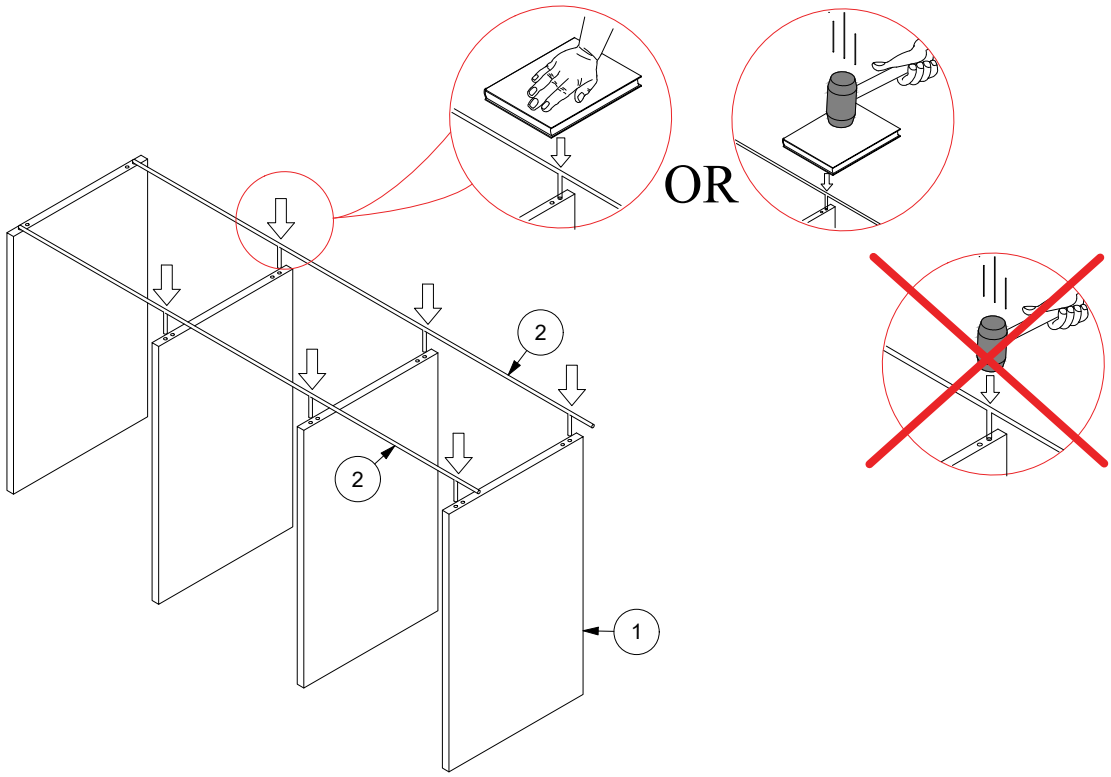
OR
2
2
1

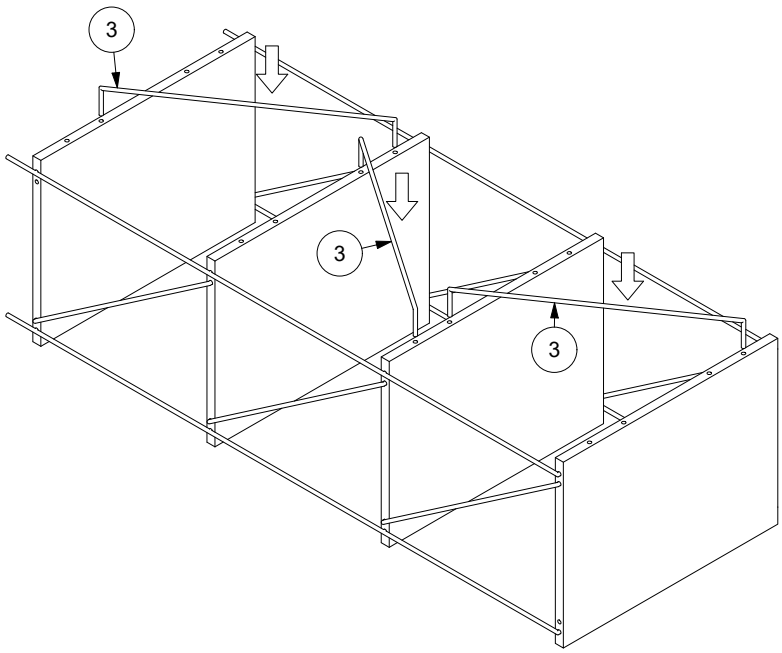
3
3
3

WARNING

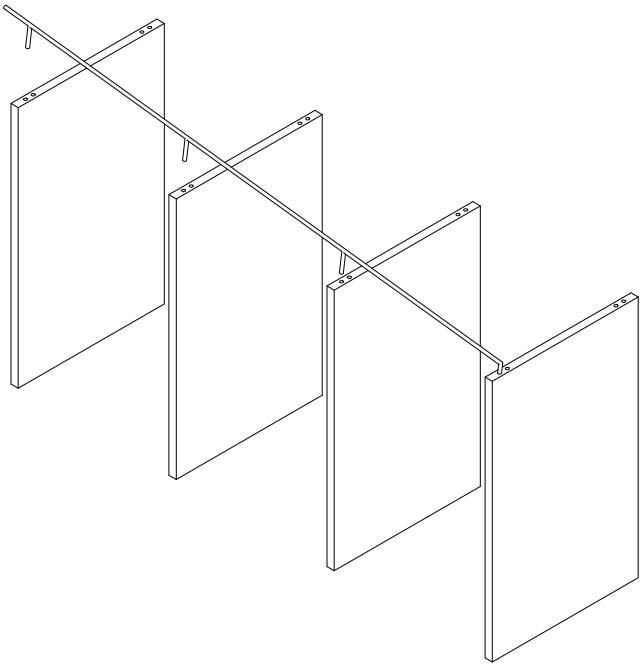

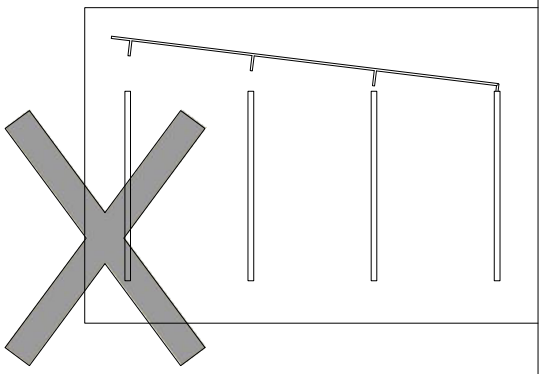

PRESS THE PROTRUDING WIRE PART EVENLY INTO THE HOLE

1

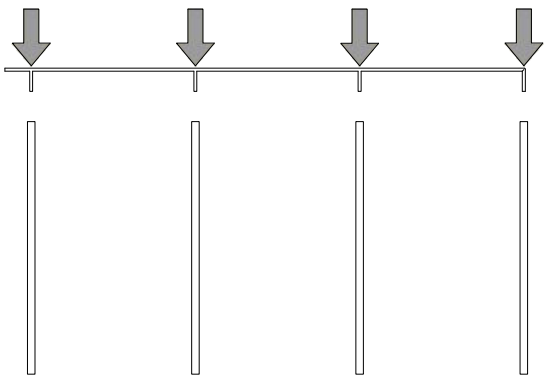

PRESS THE PROTRUDING WIRE PART EVENLY INTO THE HOLE

2

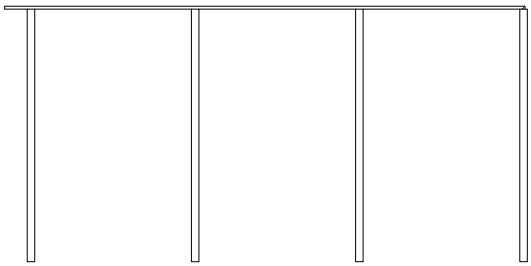

PRESS THE PROTRUDING WIRE PART EVENLY INTO THE HOLE

WARNING

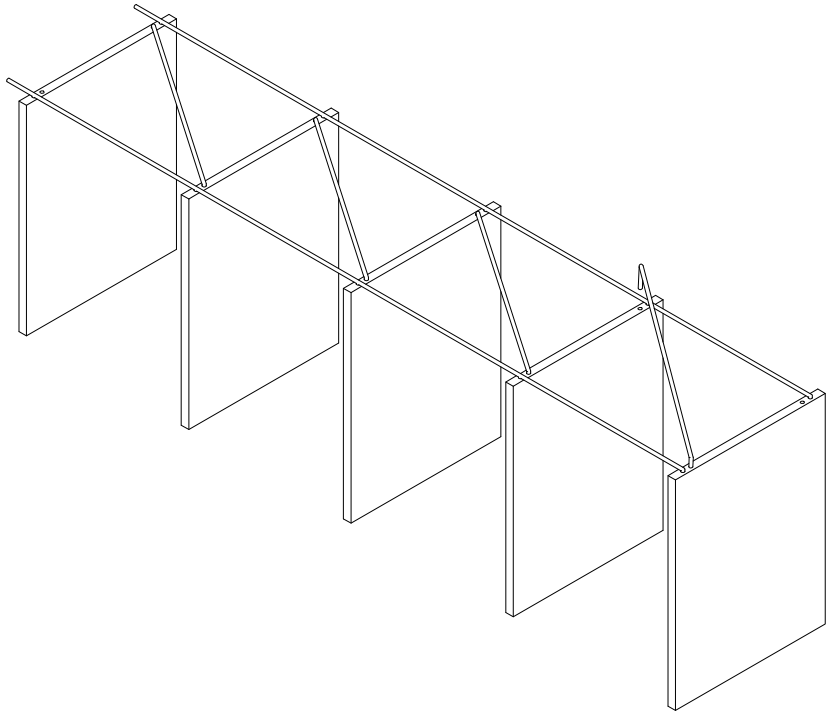

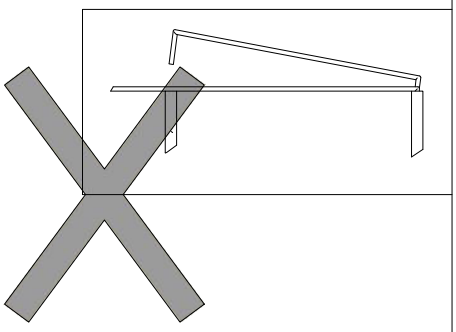

PRESS THE PROTRUDING WIRE PART EVENLY INTO THE HOLE

1

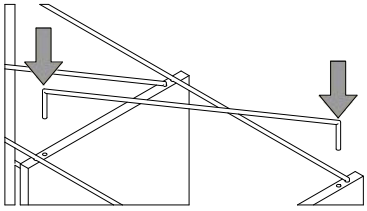

PRESS THE PROTRUDING WIRE PART EVENLY INTO THE HOLE

2

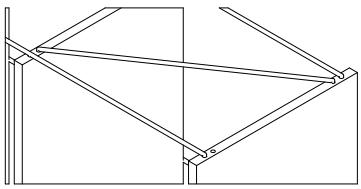

PRESS THE PROTRUDING WIRE PART EVENLY INTO THE HOLE

ASSEMBLY INSTRUCTIONS

MODEL:4 TIER RACK 600

STEP 1

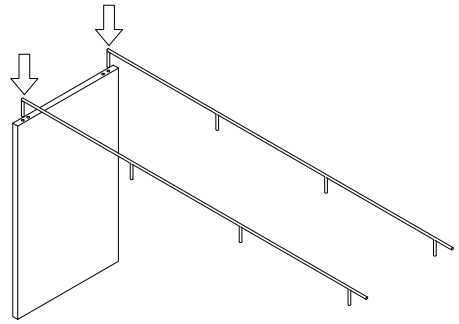

STEP 2

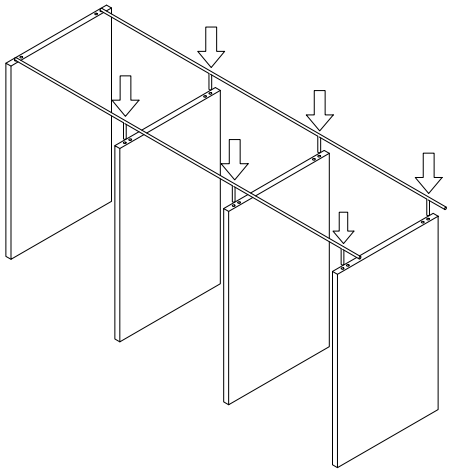

STEP 3

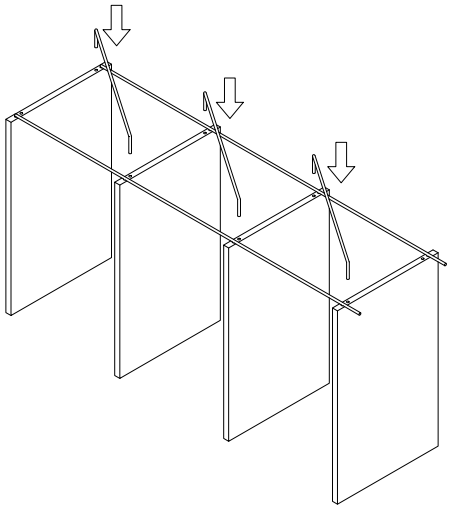

STEP 4

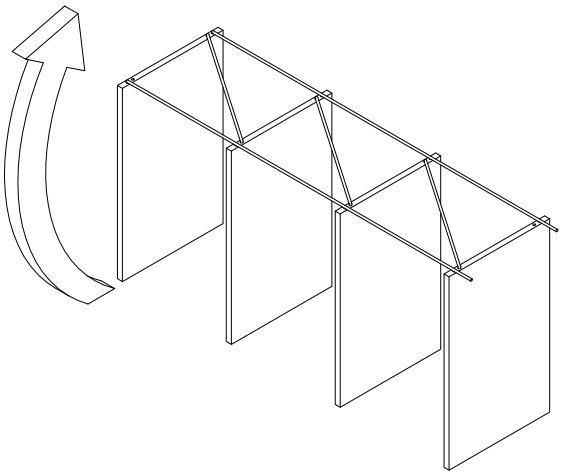

STEP 5

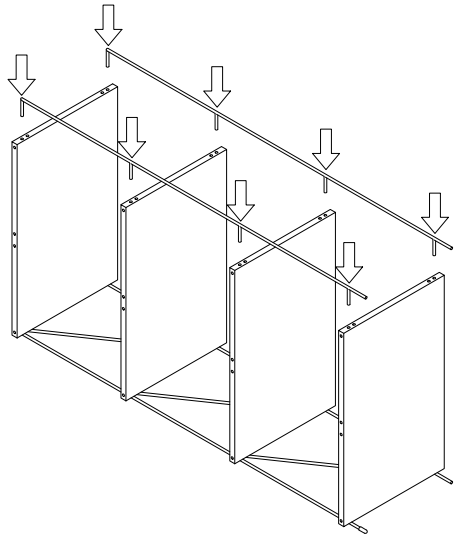

STEP 6

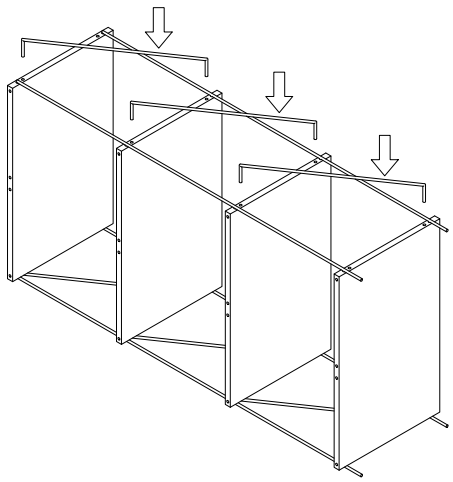

ASSEMBLY INSTRUCTIONS

MODEL:4 TIER RACK 600

STEP 7

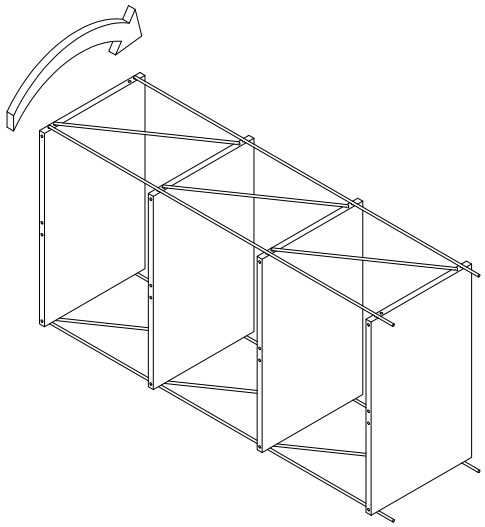

STEP 8

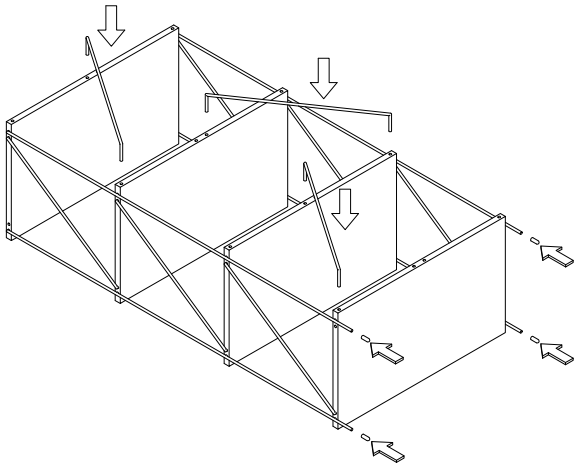

STEP 9

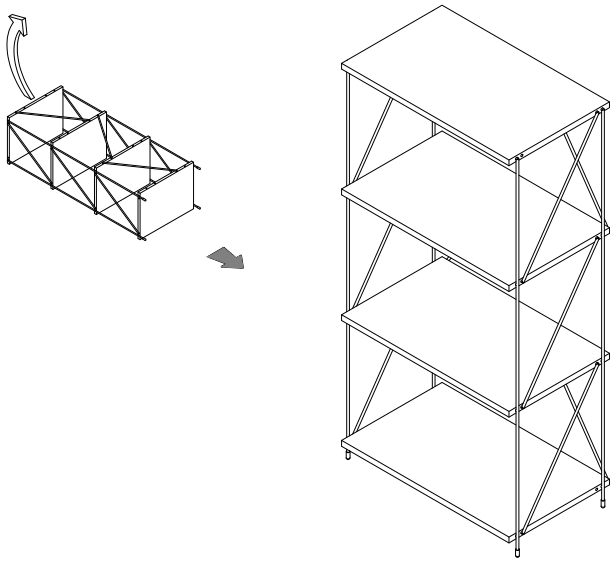

Recommended Maximum Weight

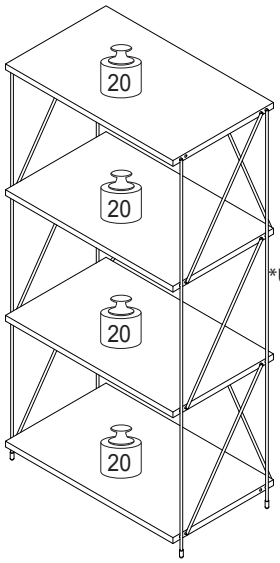

*Unit in Pound(lbs)

WARNING:

>This unit has been designed to support the maximum loads shown. Exceeding these load limits could cause sagging, instability, product collapse, and/or serious injury.

>DO NOT allow children to climb on unit.

>Put heavier items on lower shelves.