# ASSEMBLY INSTRUCTIONS

**MODEL:5 TIER RACK 600**

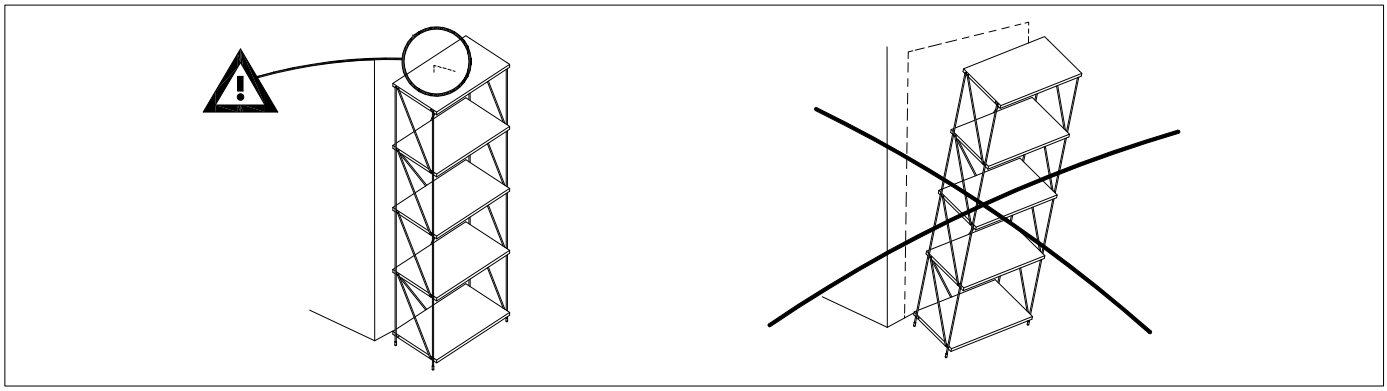

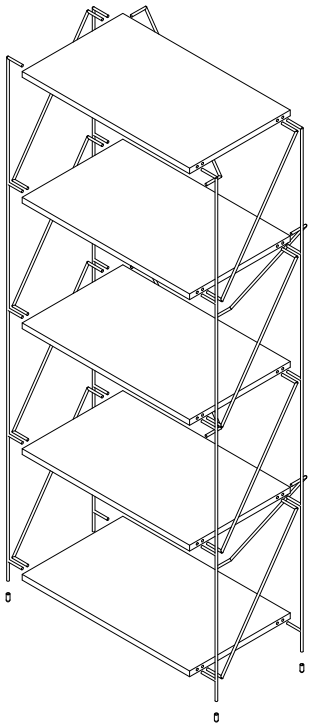

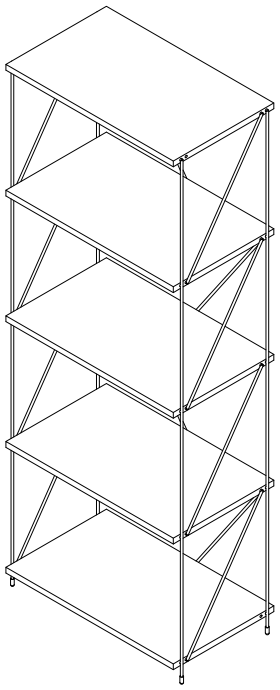

COMPLETED ASSEMBLY

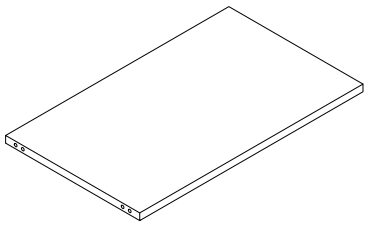

(1) *5 PCS*

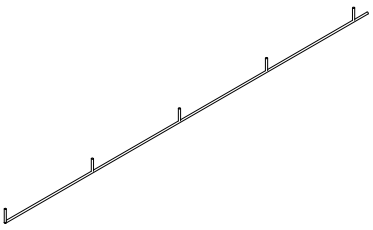

(2) *4 PCS*

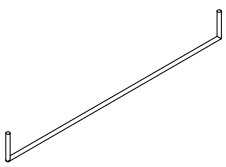

(3) *12 PCS*



(4) *4 PCS*

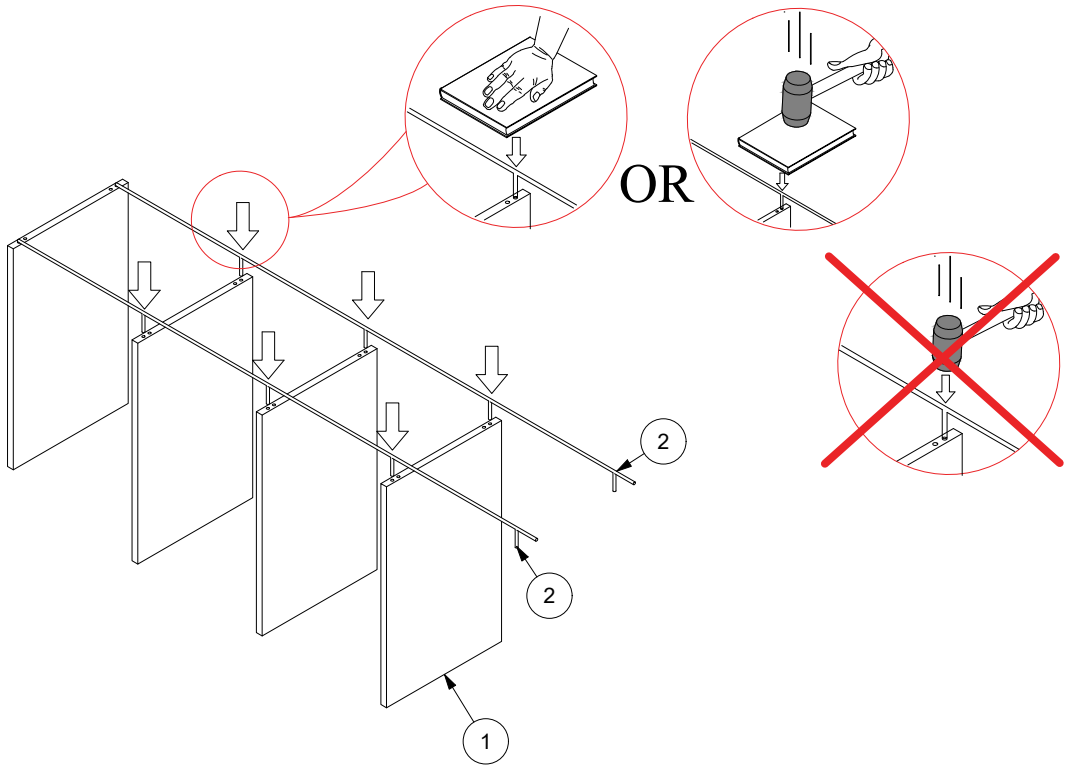
OR
2
2
1

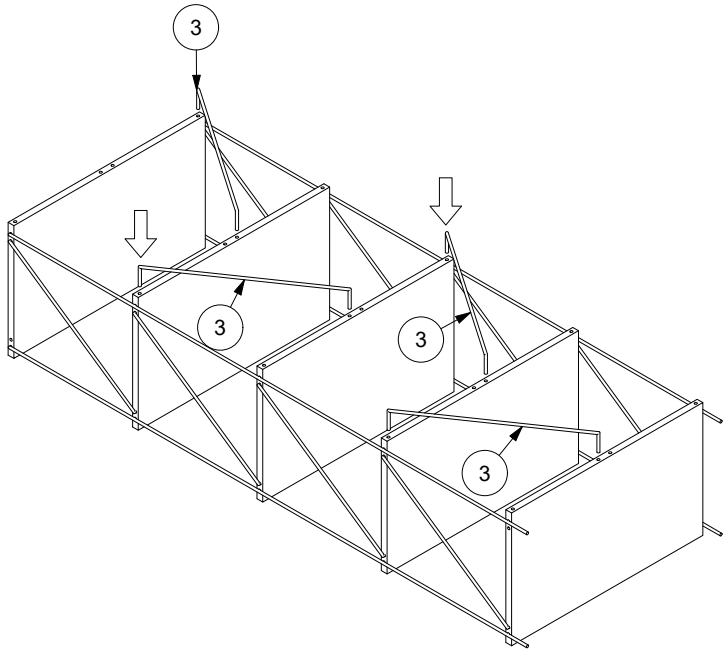
3
3
3
3

# WARNING

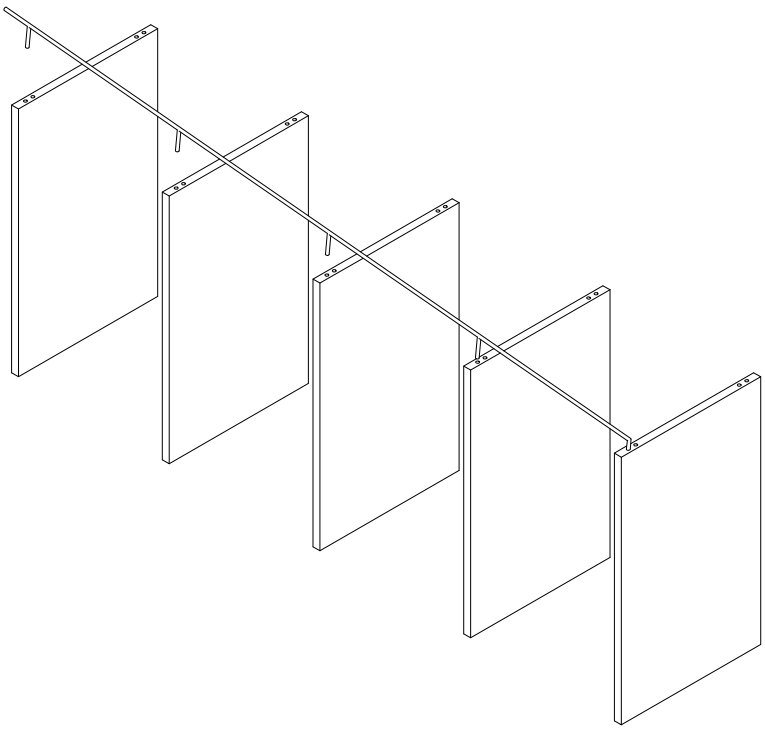

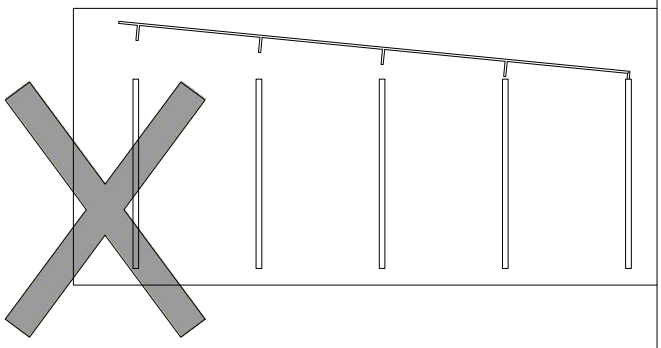

**PRESS THE PROTRUDING WIRE PART EVENLY INTO THE HOLE**

**1**

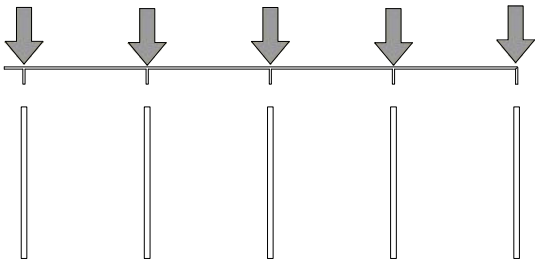

**PRESS THE PROTRUDING WIRE PART EVENLY INTO THE HOLE**

**2**

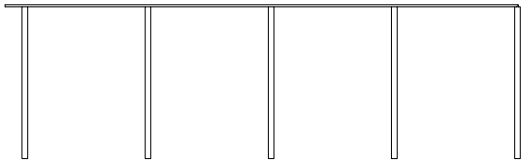

**PRESS THE PROTRUDING WIRE PART EVENLY INTO THE HOLE**

# WARNING

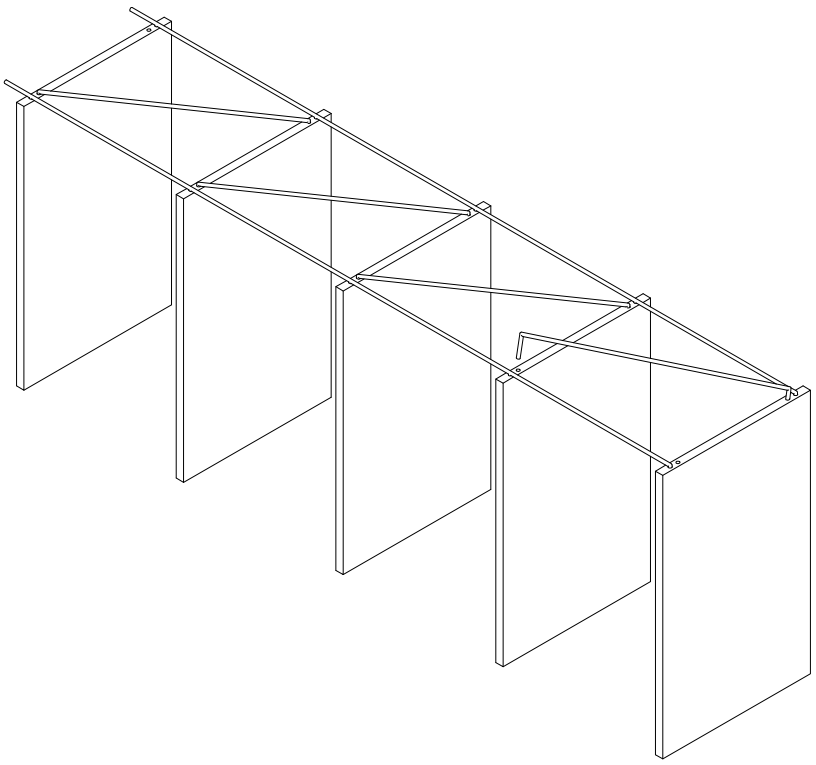

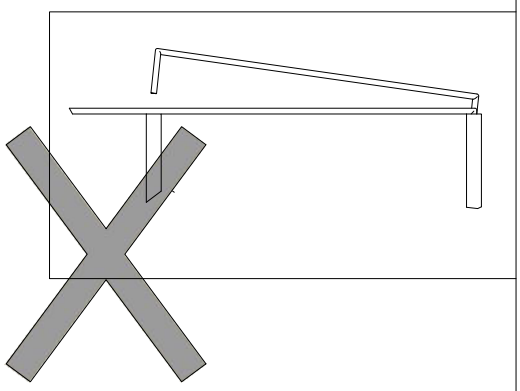

**PRESS THE PROTRUDING WIRE PART EVENLY INTO THE HOLE**

## 1

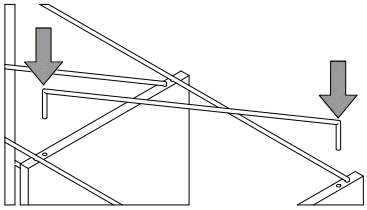

**PRESS THE PROTRUDING WIRE PART EVENLY INTO THE HOLE**

## 2

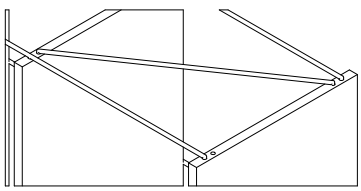

**PRESS THE PROTRUDING WIRE PART EVENLY INTO THE HOLE**

# ASSEMBLY INSTRUCTIONS

**MODEL:5 TIER RACK 600**

STEP 1

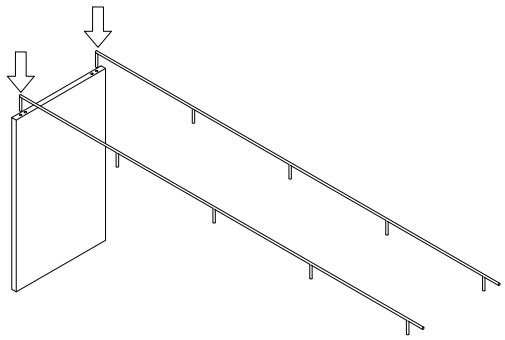

STEP 2

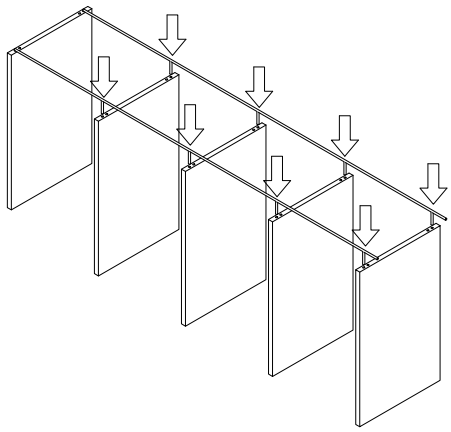

STEP 3

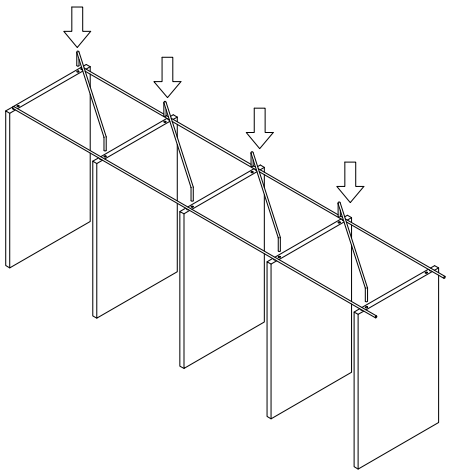

STEP 4

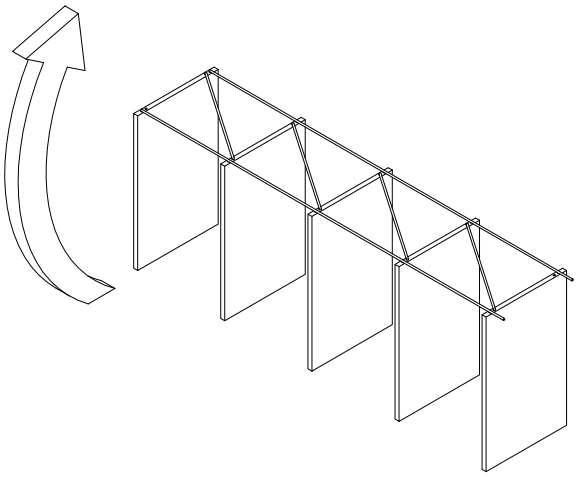

STEP 5

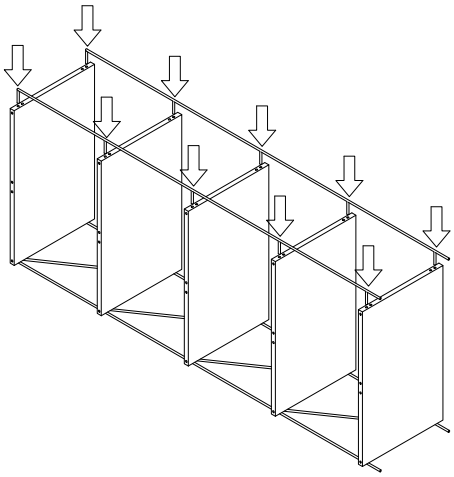

STEP 6

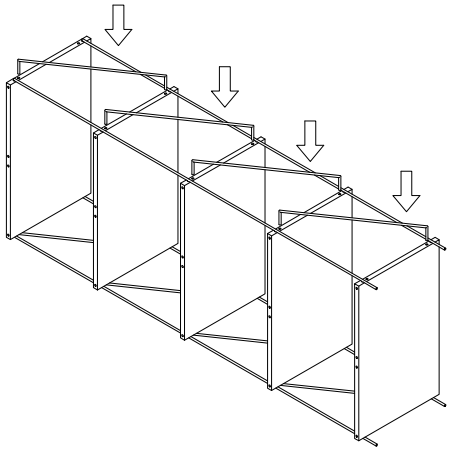

# ASSEMBLY INSTRUCTIONS

**MODEL:5 TIER RACK 600**

STEP 7

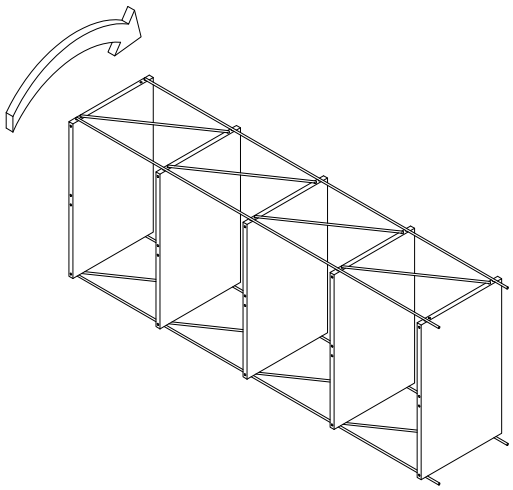

STEP 8

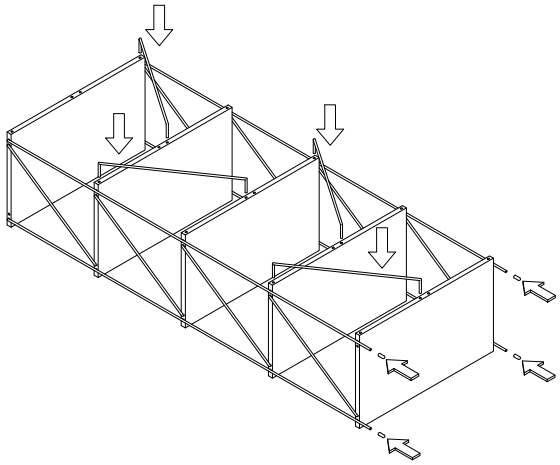

STEP 9

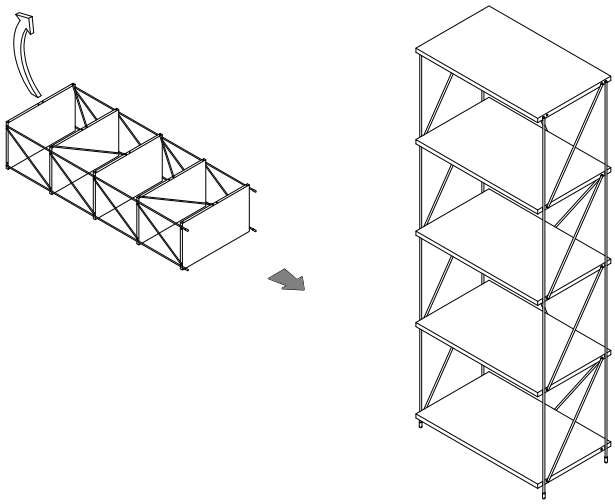

STEP 10

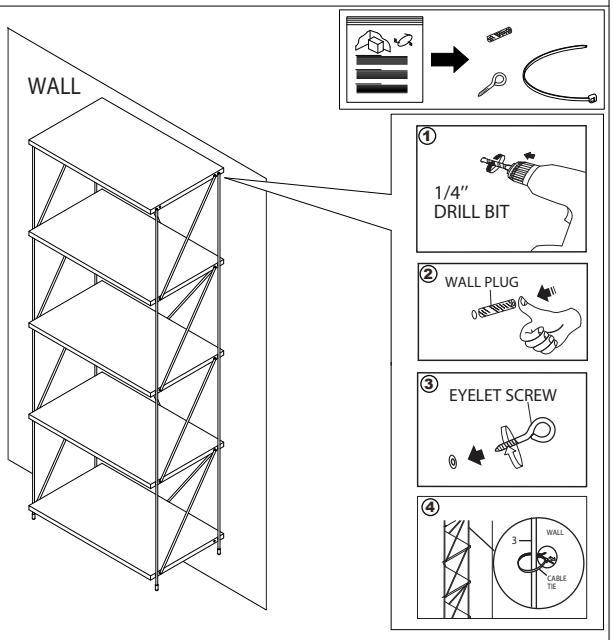


Recommended Maximum Weight

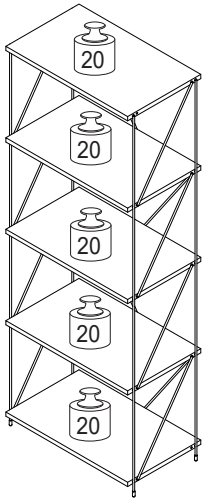


*Unit in Pound(lbs)

***WARNING:***

*>This unit has been designed to support the maximum loads shown. Exceeding these load limits could cause sagging, instability, product collapse, and/or serious injury.*

*>DO NOT allow children to climb on unit.*

*>Put heavier items on lower shelves.*