ASSEMBLY INSTRUCTIONS

MODEL:6 TIER RACK 600

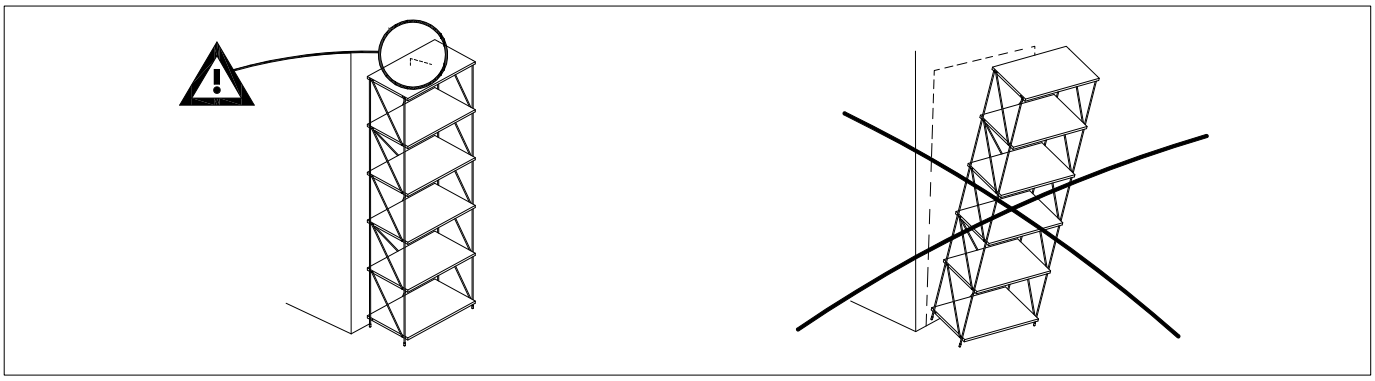

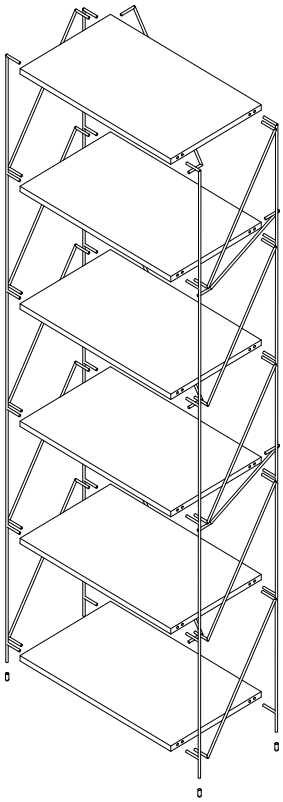

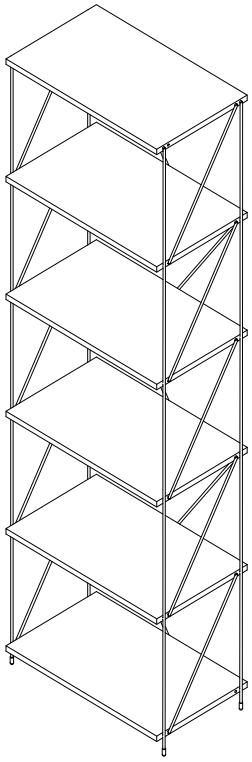

COMPLETED ASSEMBLY

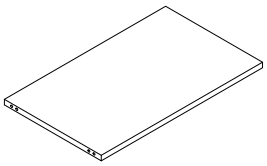

① *6PCS*

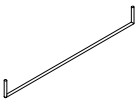

② *15PCS*

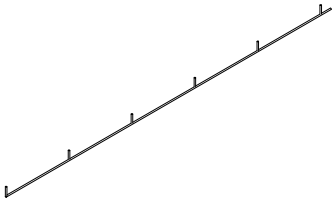

③ *4PCS*

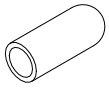

④ *4PCS*

ASSEMBLY INSTRUCTIONS

MODEL:6 TIER RACK 600

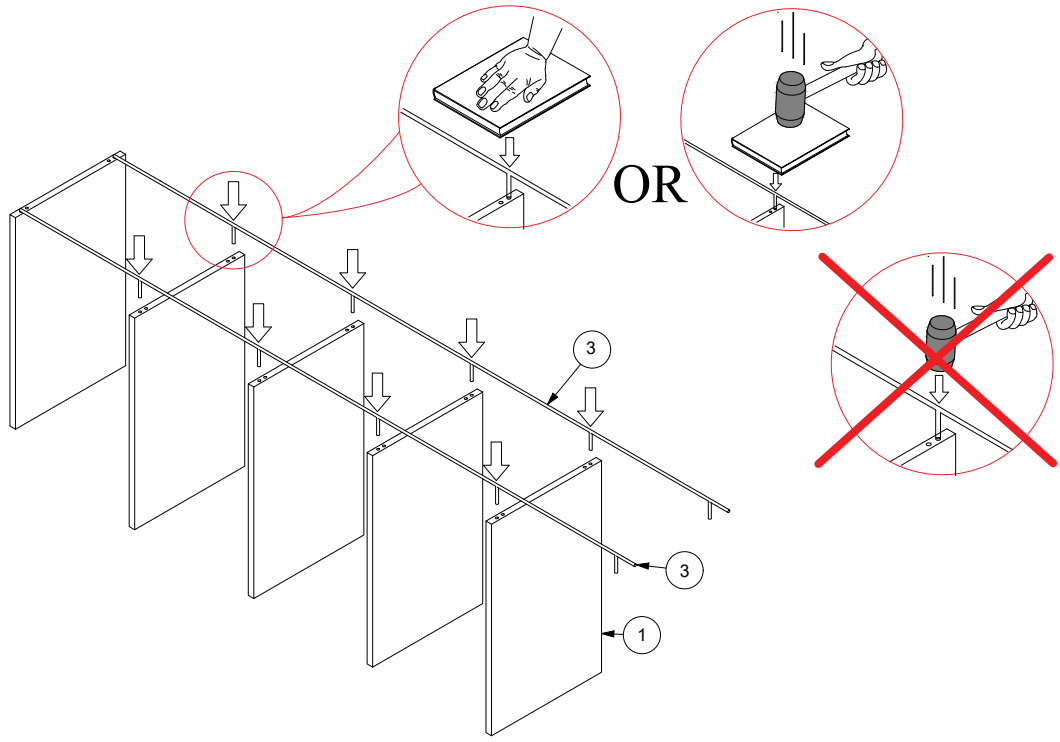

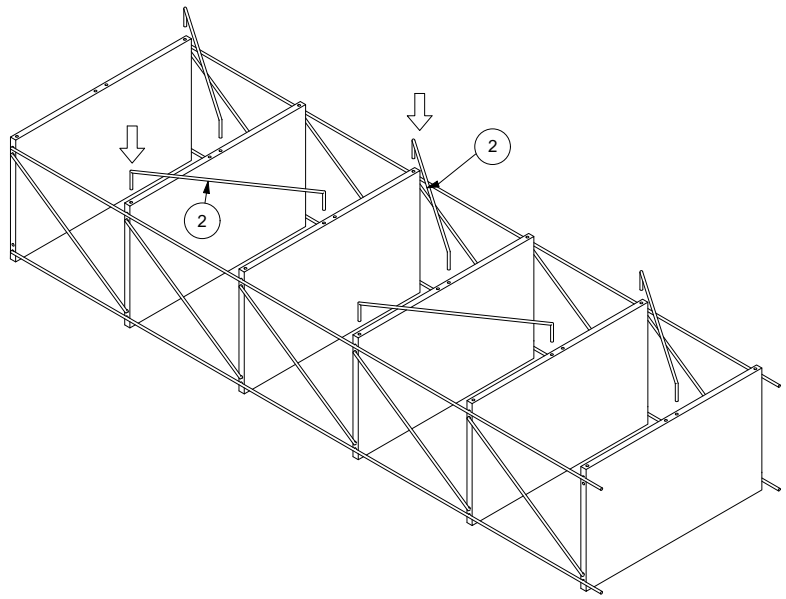

WARNING

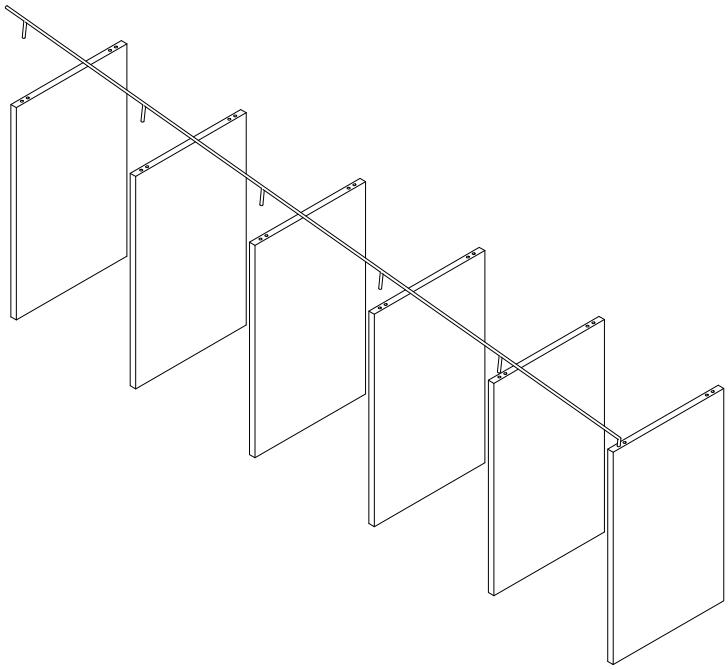

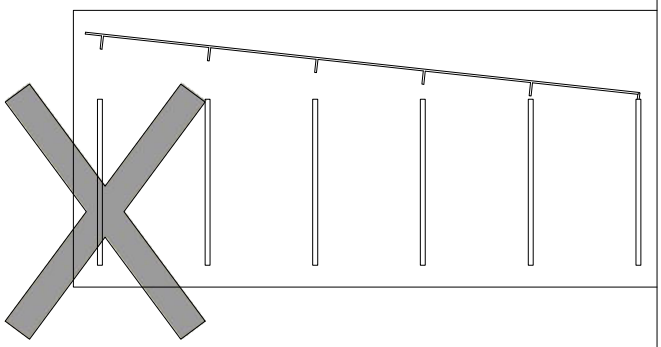

PRESS THE PROTRUDING WIRE PART EVENLY INTO THE HOLE

1

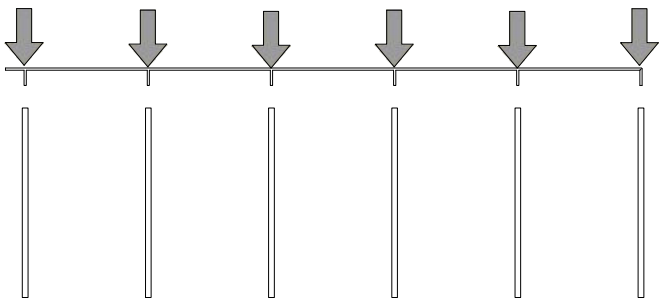

PRESS THE PROTRUDING WIRE PART EVENLY INTO THE HOLE

2

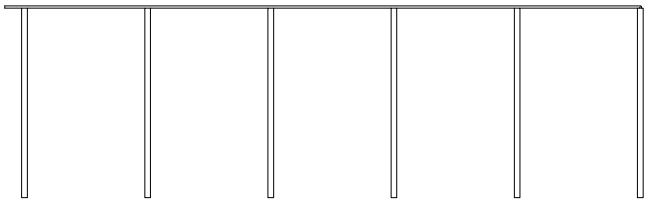

PRESS THE PROTRUDING WIRE PART EVENLY INTO THE HOLE

WARNING

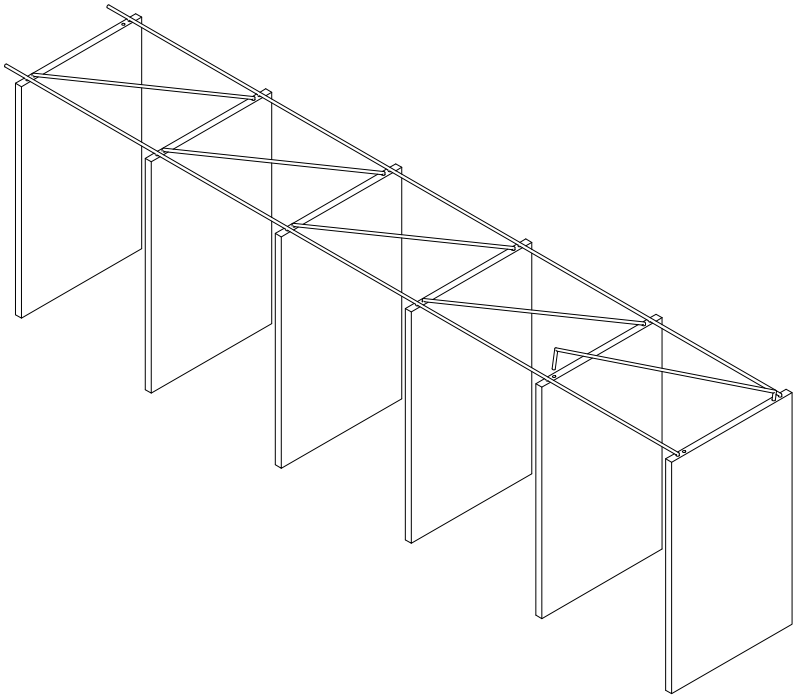

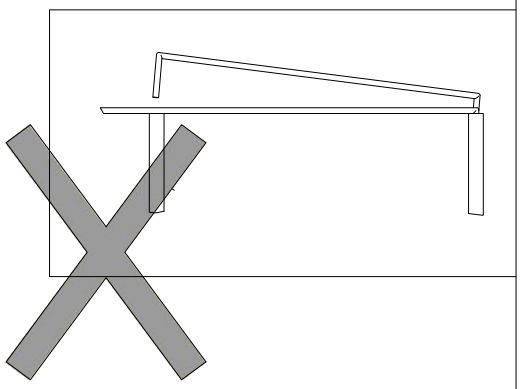

PRESS THE PROTRUDING WIRE PART EVENLY INTO THE HOLE

1

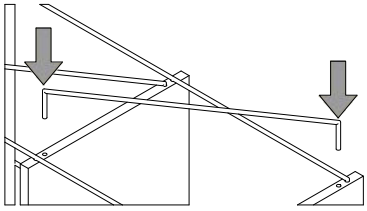

PRESS THE PROTRUDING WIRE PART EVENLY INTO THE HOLE

2

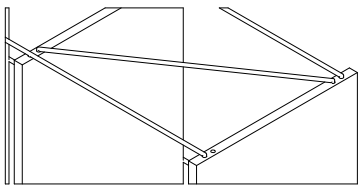

PRESS THE PROTRUDING WIRE PART EVENLY INTO THE HOLE

ASSEMBLY INSTRUCTIONS

MODEL:6 TIER RACK 600

STEP 1

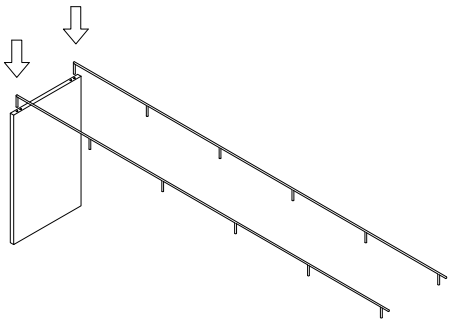

STEP 2

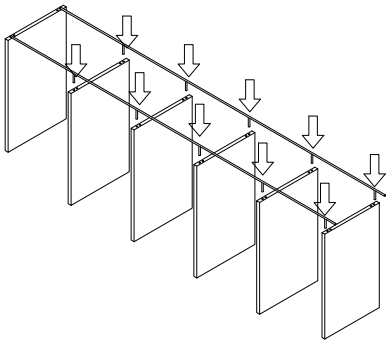

STEP 3

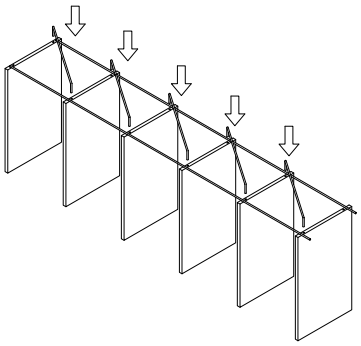

STEP 4

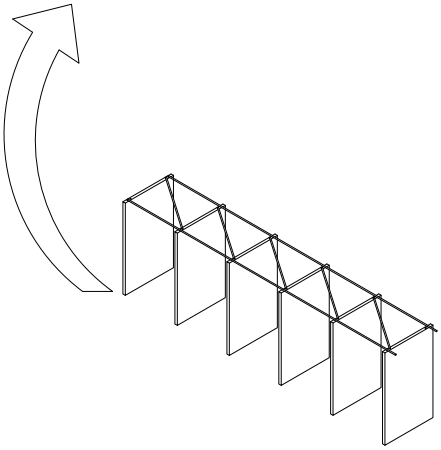

STEP 5

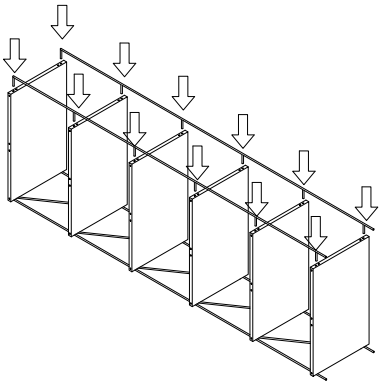

STEP 6

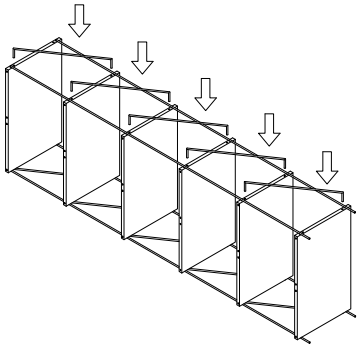

ASSEMBLY INSTRUCTIONS

MODEL:6 TIER RACK 600

STEP 7

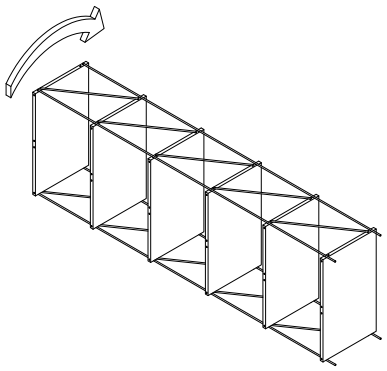

STEP 8

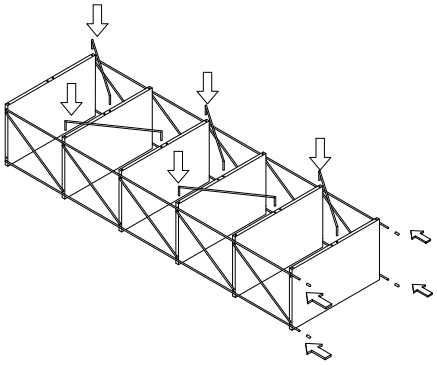

STEP 9

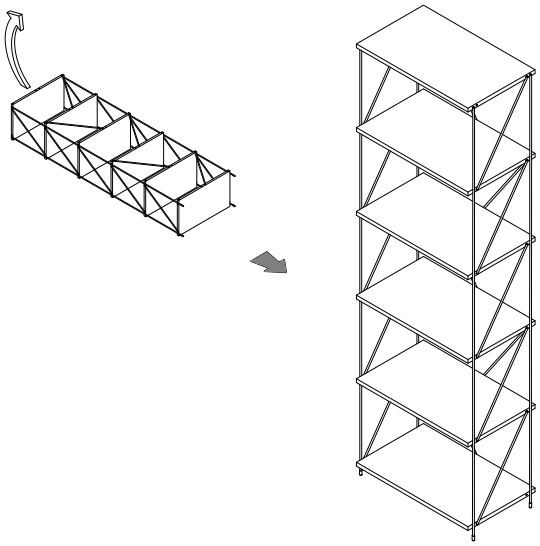

STEP 10

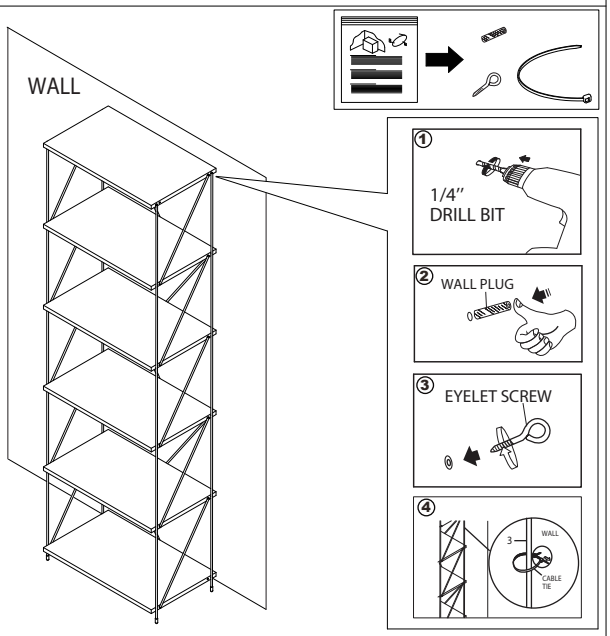

Recommended Maximum Weight

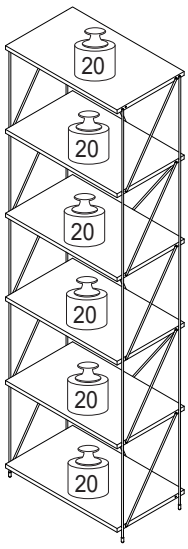

*Unit in Pound(lbs)

WARNING:

>This unit has been designed to support the maximum loads shown. Exceeding these load limits could cause sagging, instability, product collapse, and/or serious injury.

>DO NOT allow children to climb on unit.

>Put heavier items on lower shelves.