

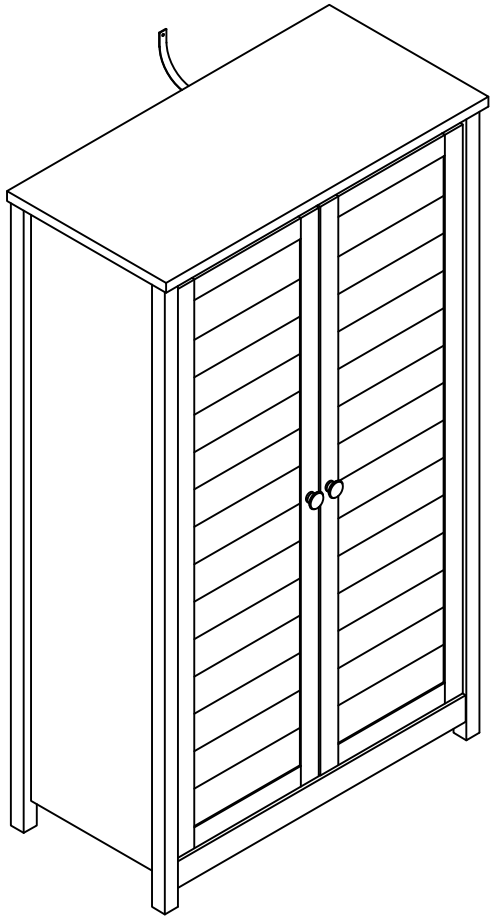

MODEL: SC24005

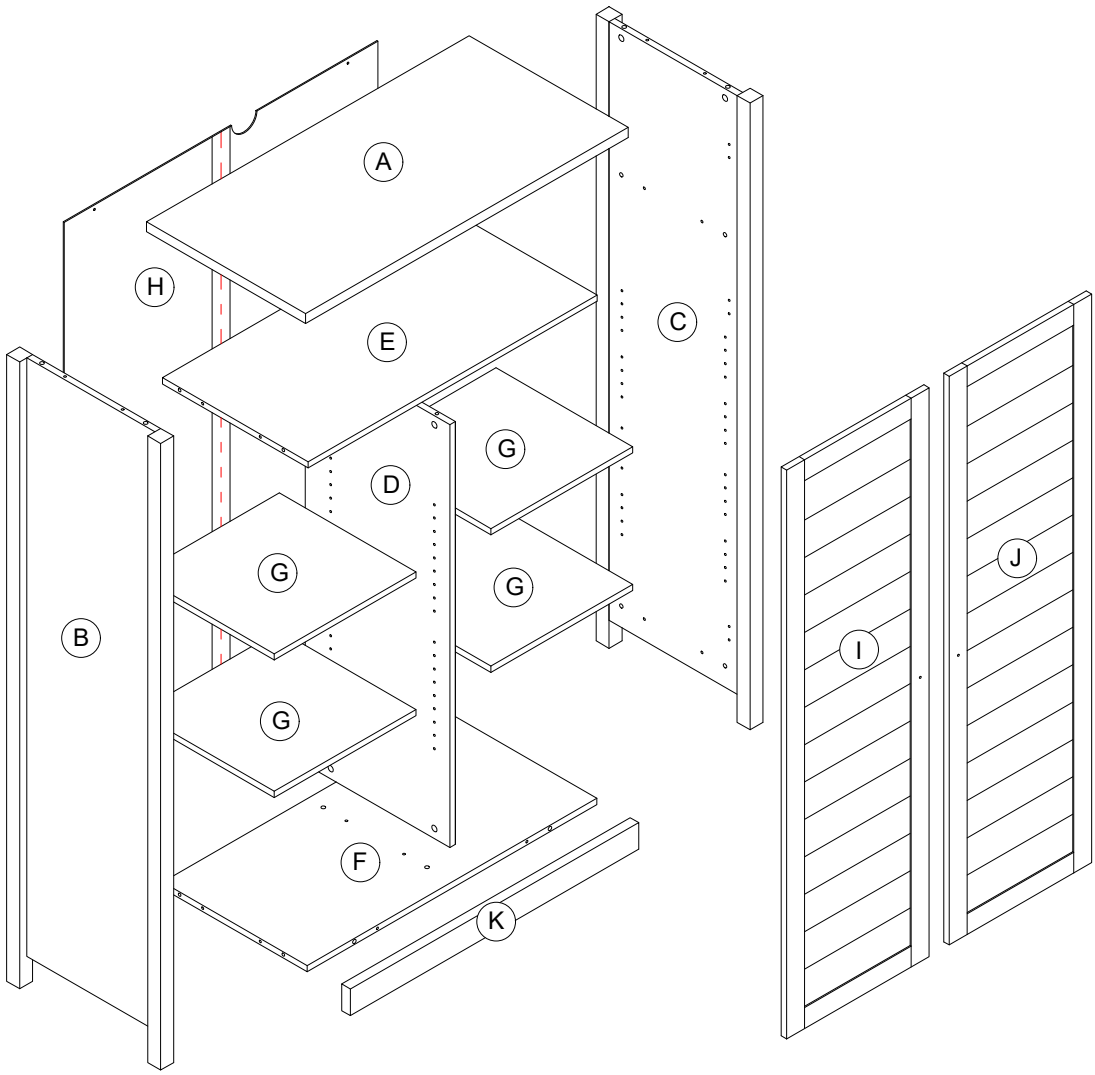
A
H
E
C
G
D
G
G
B
G
F
K
I
J

HARDWARE LIST

1 x 18

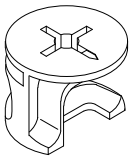

2 x 18

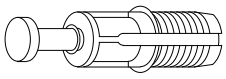

3 x 2

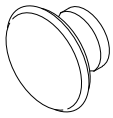

4 x 16

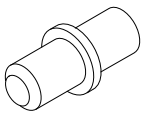

5 x 6

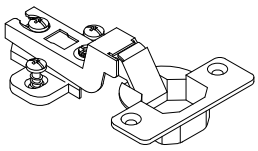

6 x 18

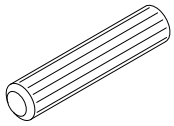

7 x 16

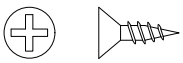

8 x 2

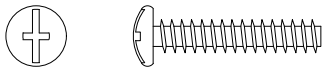

9 x 4

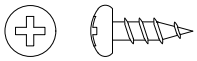

10 x 1

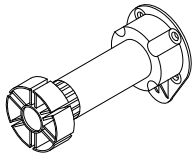

11 x 1

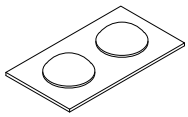

12 x 40

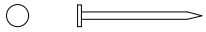

96 x 1

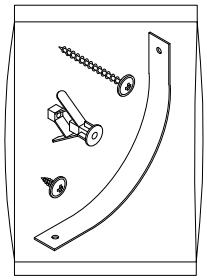

Step 1

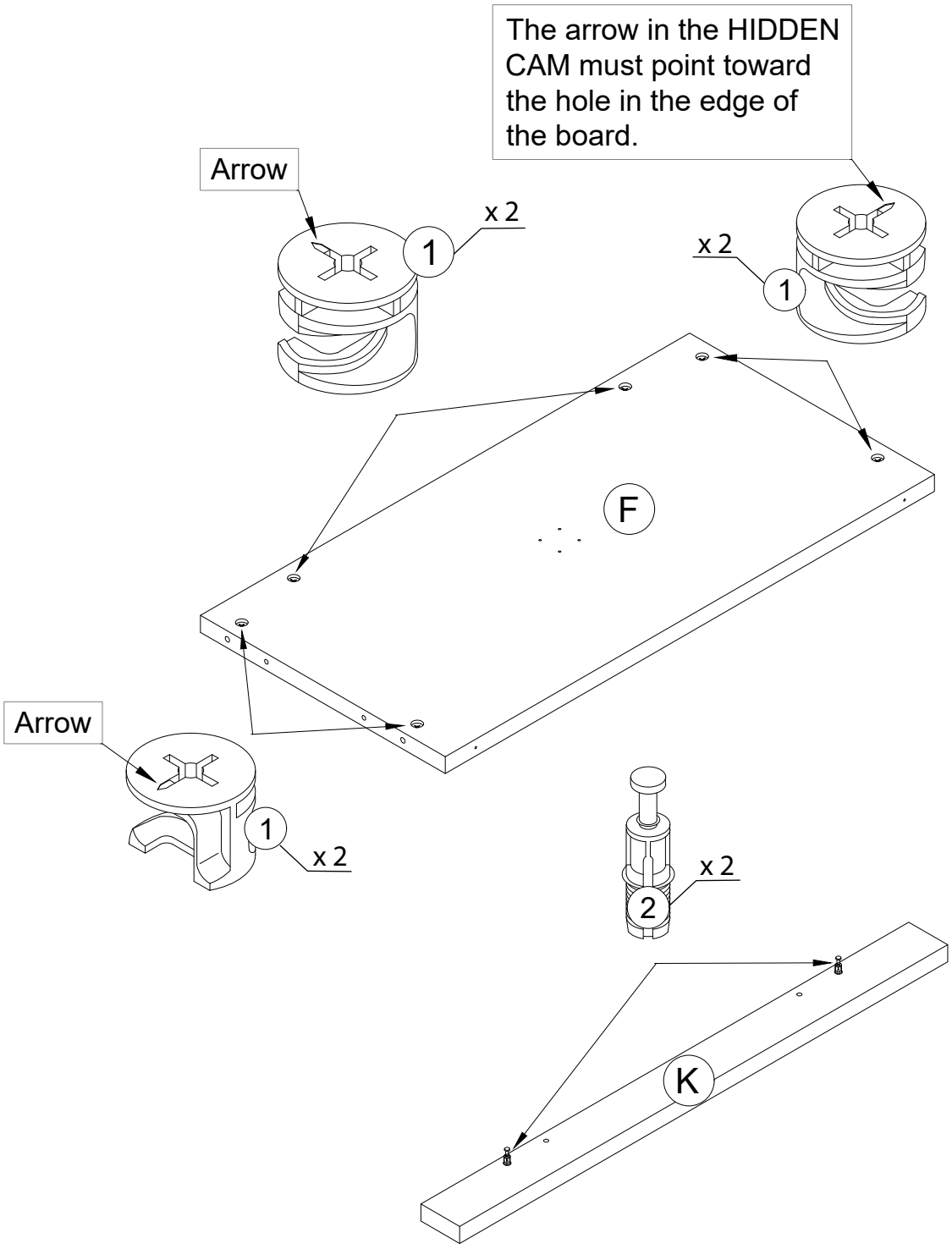
The arrow in the HIDDEN CAM must point toward the hole in the edge of the board.
Arrow
x 2
1
x 2
1
F
Arrow
1
x 2
x 2
2
K

Step 2

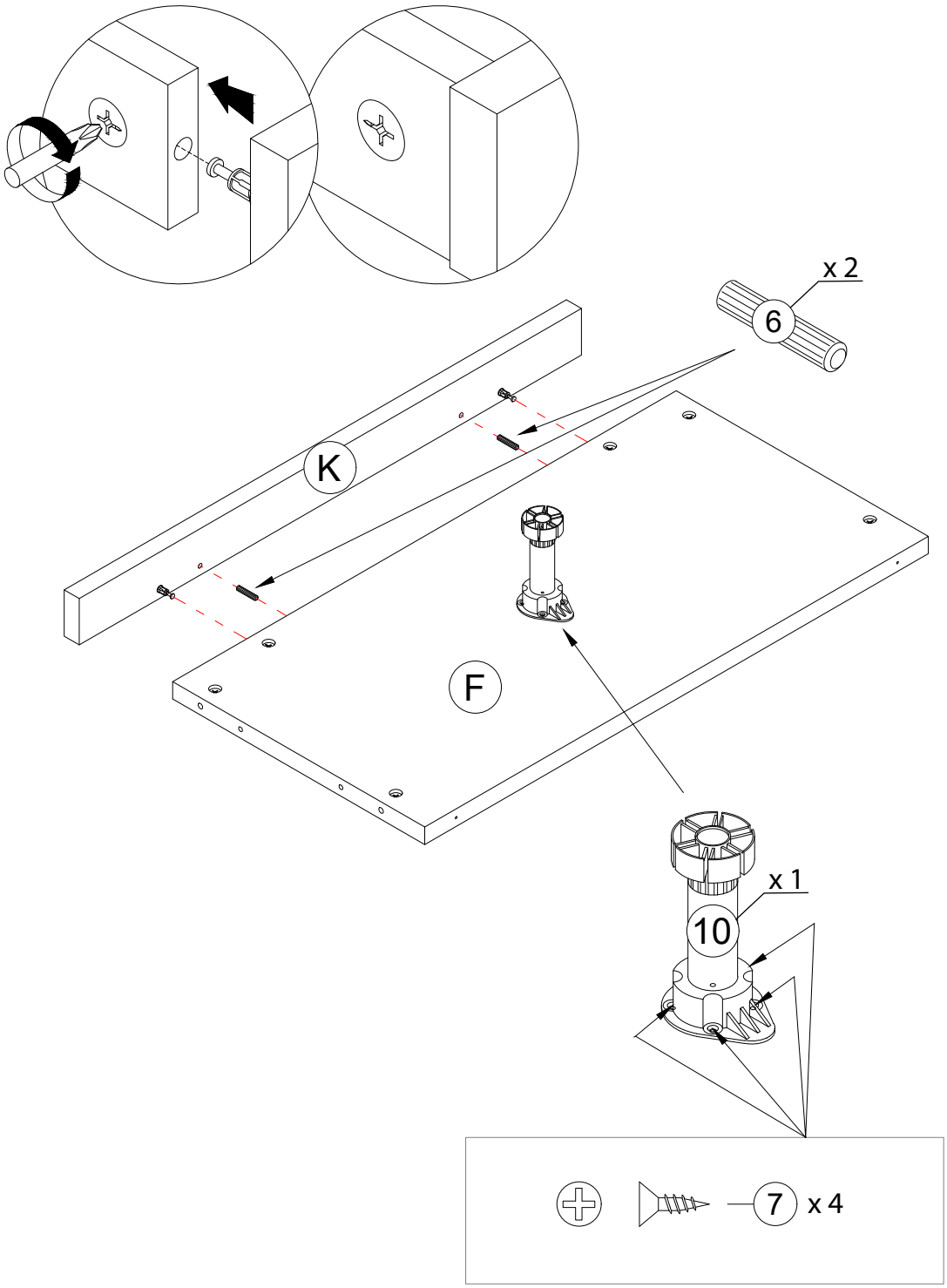

Step 3

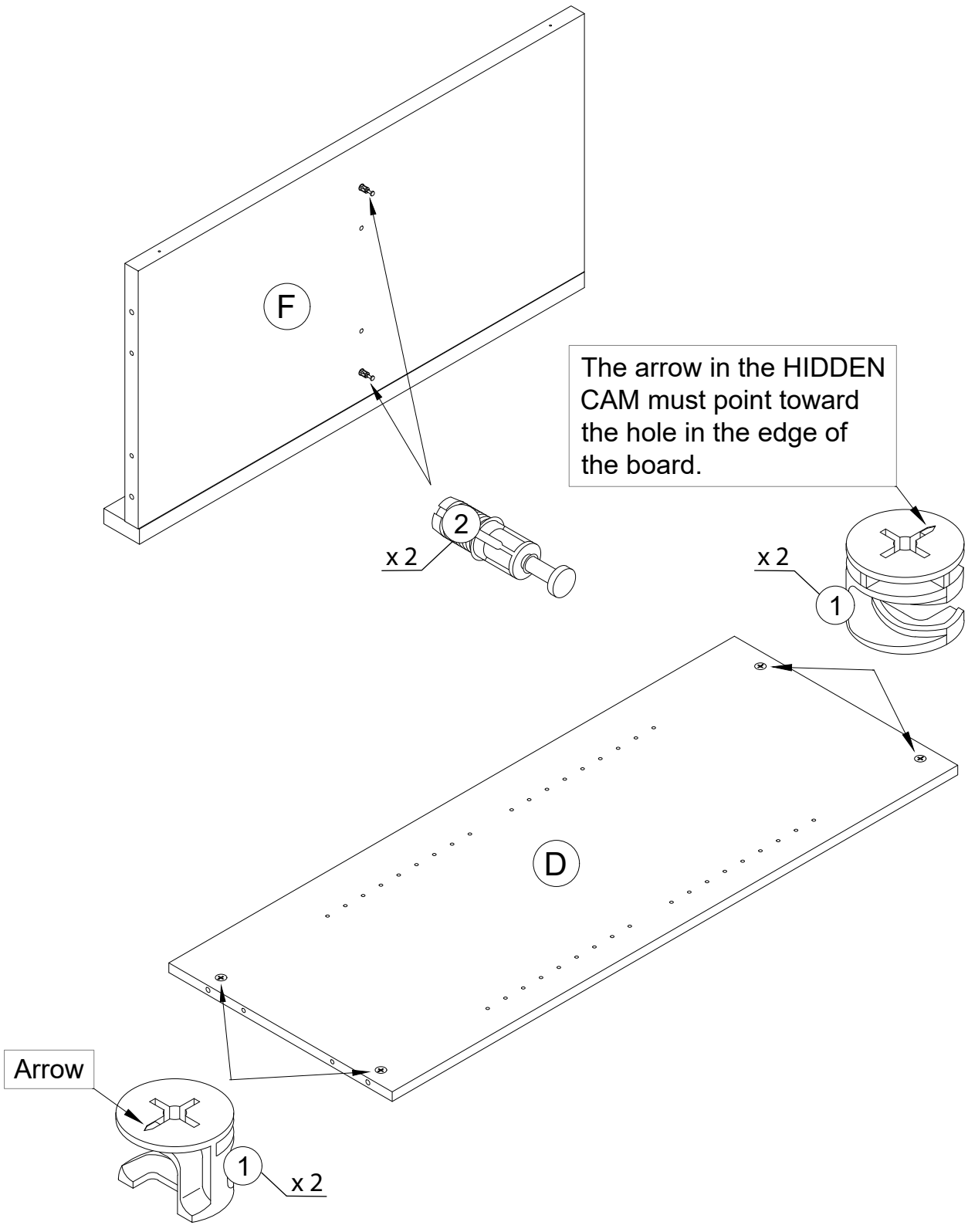
F
2
x 2
The arrow in the HIDDEN CAM must point toward the hole in the edge of the board.
x 2
1
D
Arrow
1
x 2

Step 4

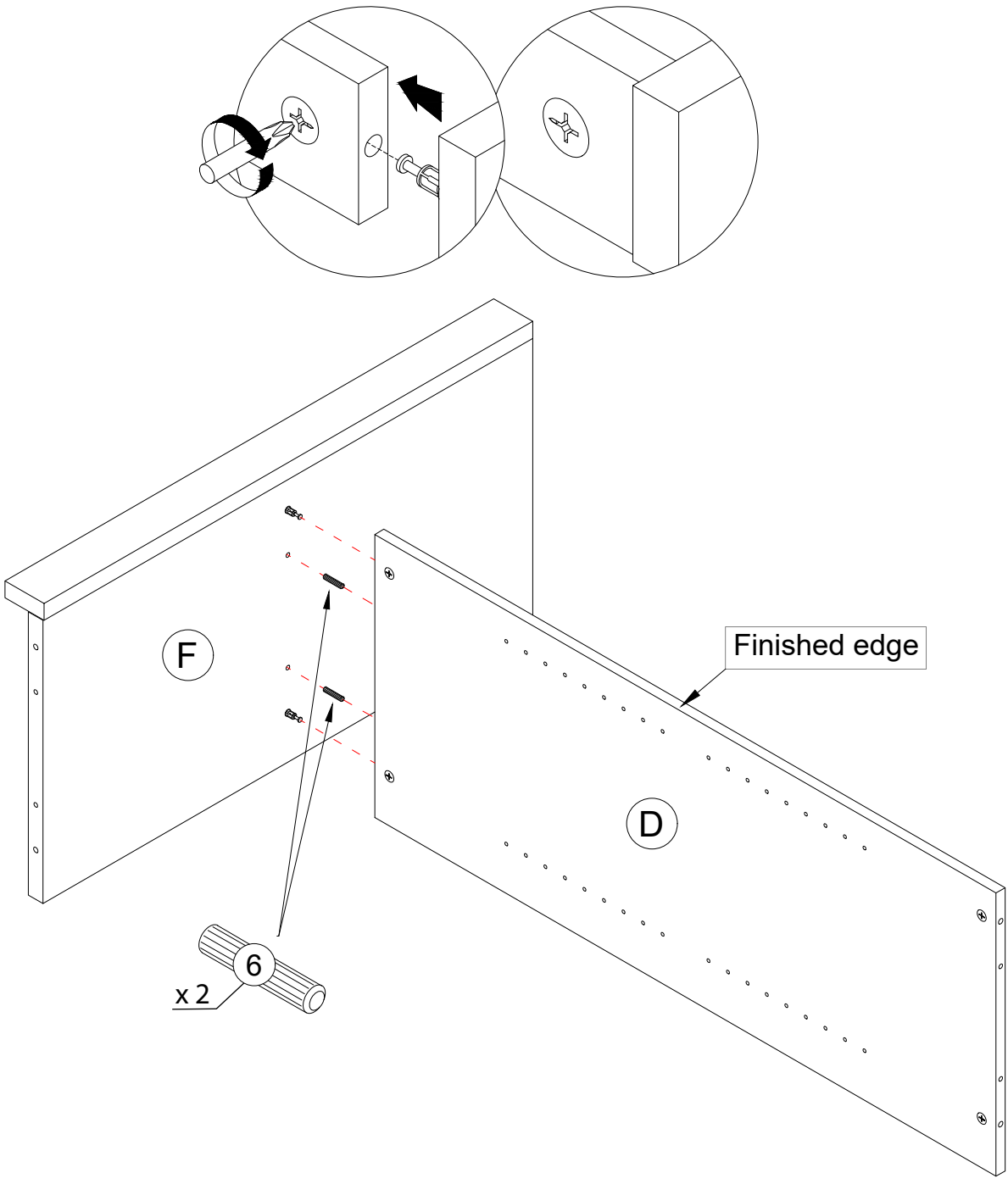

Step 5

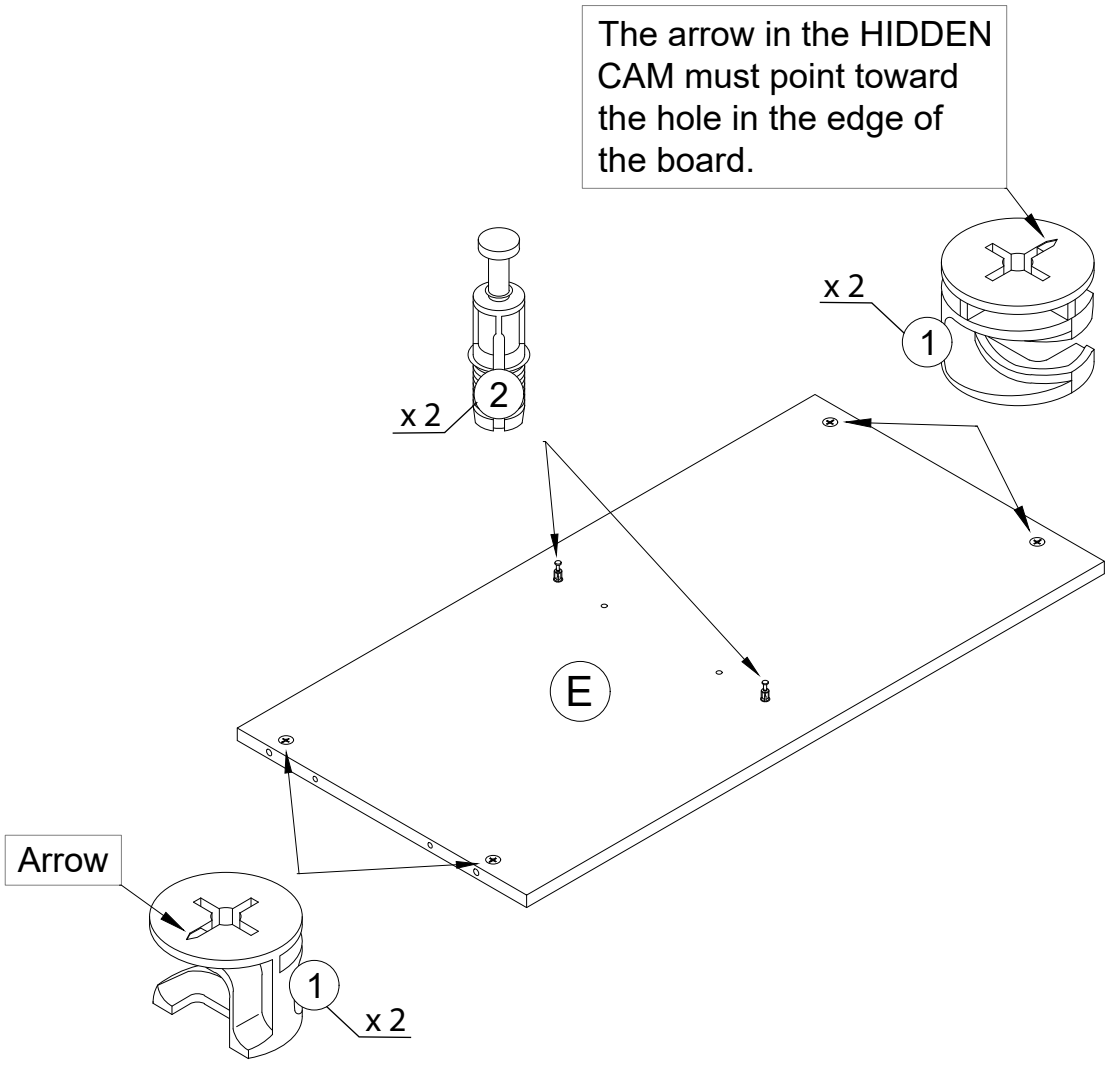
The arrow in the HIDDEN CAM must point toward the hole in the edge of the board.
x 2
1
x 2
2
E
Arrow
1
x 2

Step 6

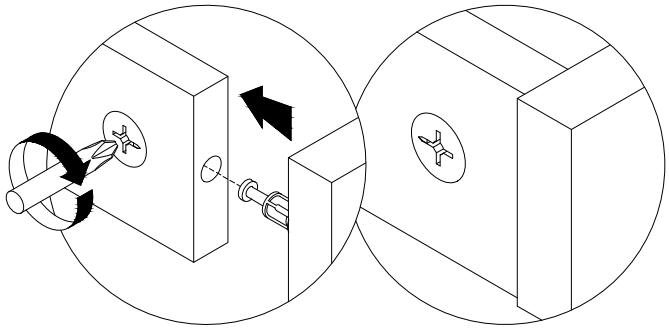

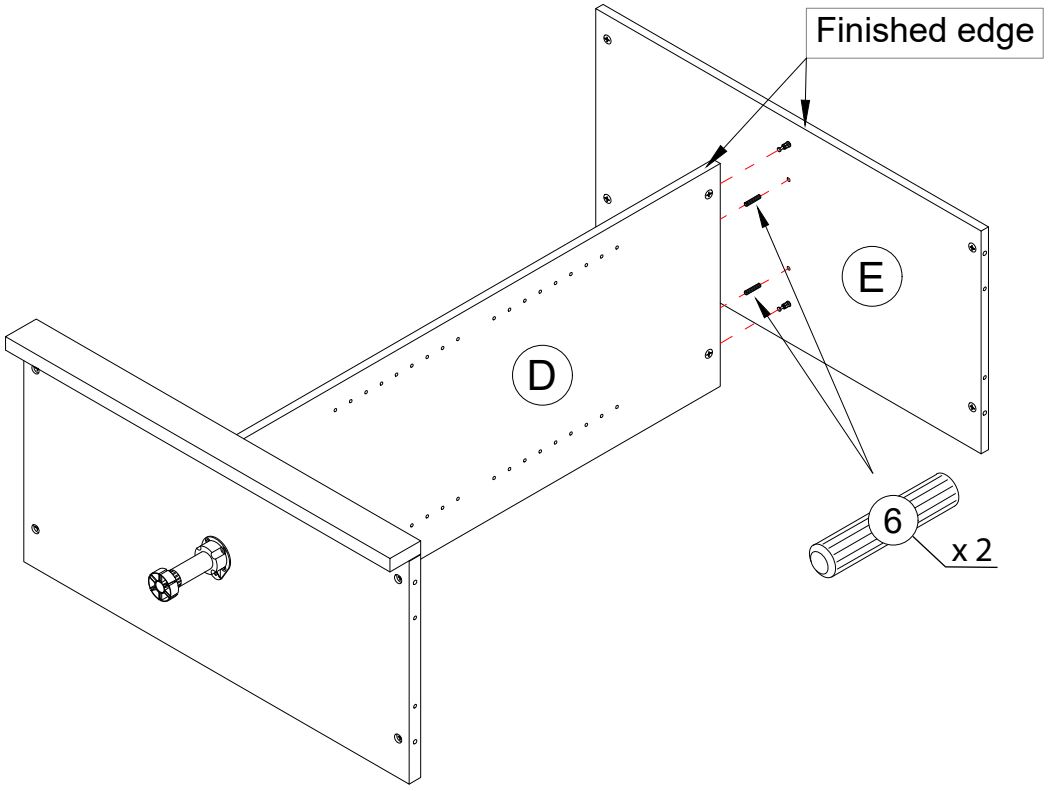

Step 7

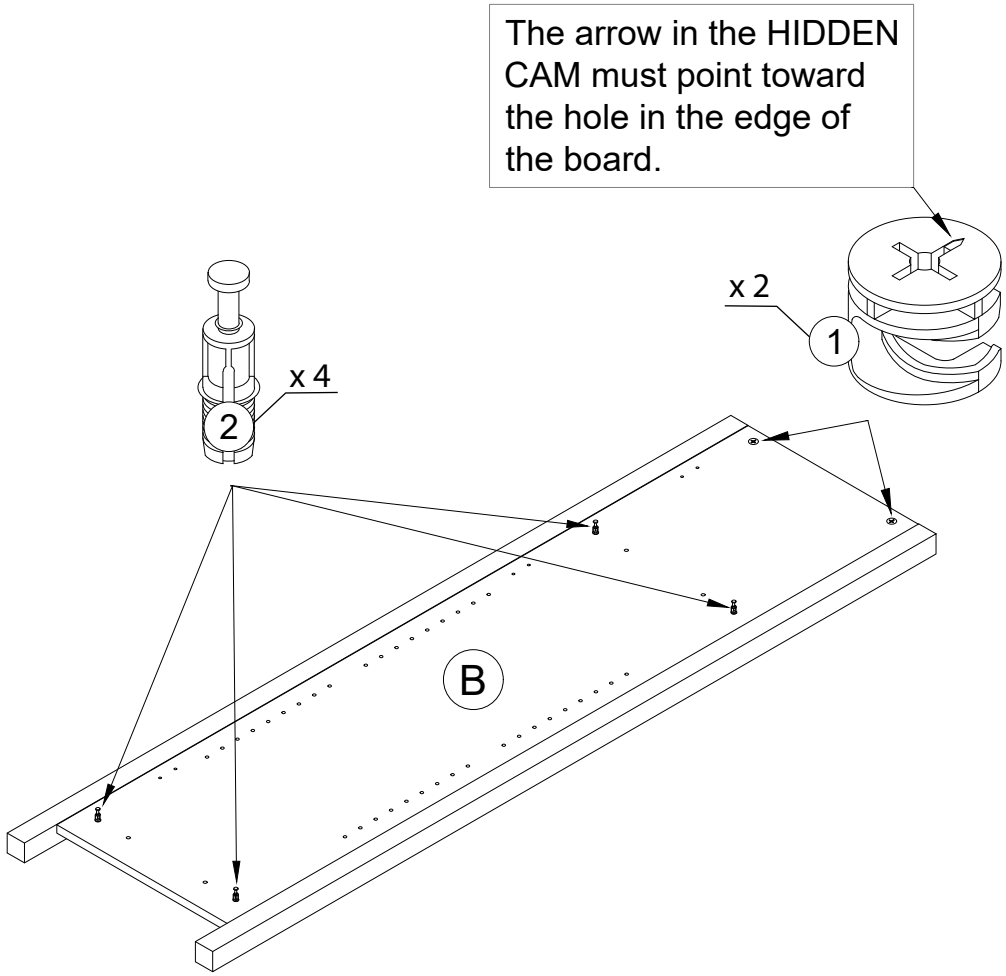
The arrow in the HIDDEN CAM must point toward the hole in the edge of the board.
x 2
1
x 4
2
B

Step 8

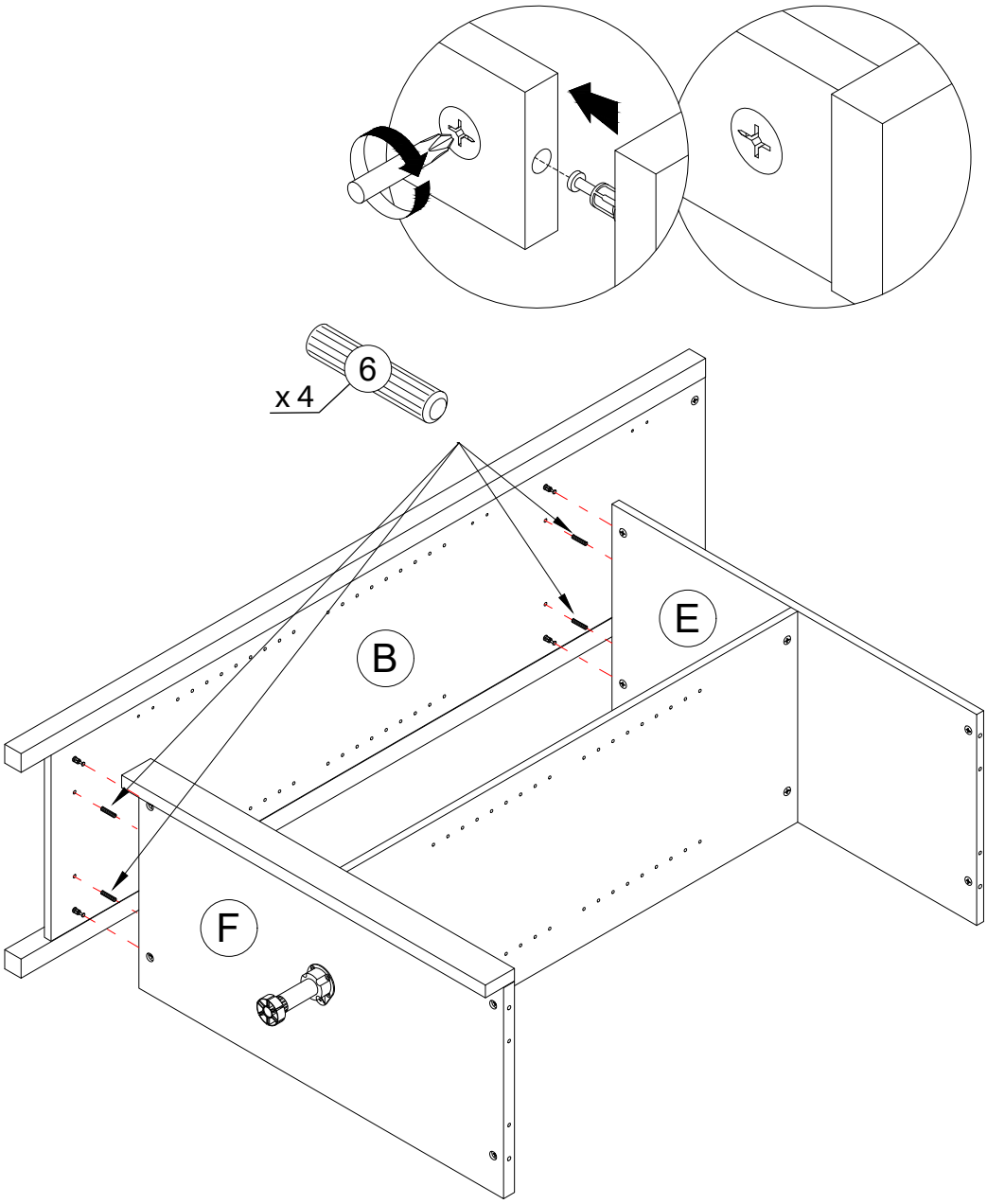

Step 9

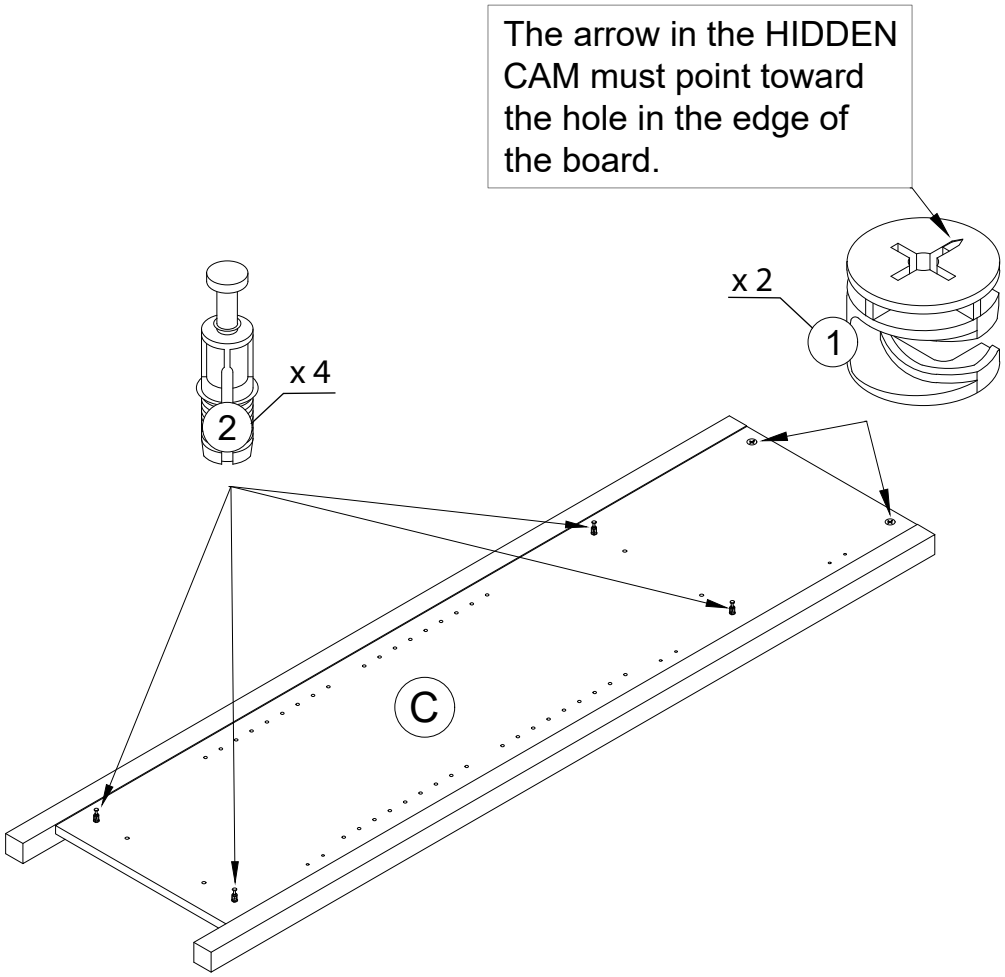
The arrow in the HIDDEN CAM must point toward the hole in the edge of the board.
x 2
1
x 4
2
C

Step 10

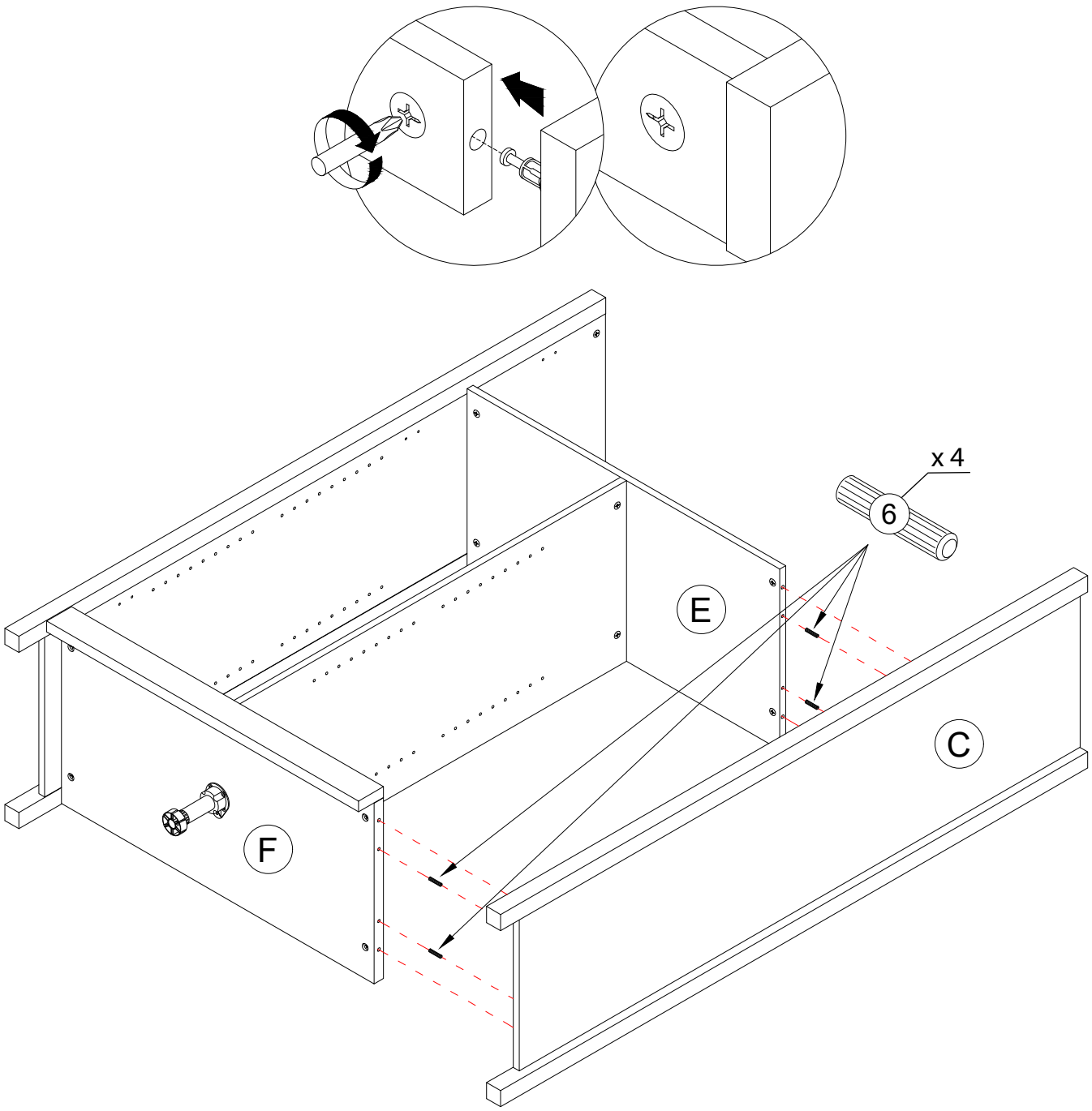

Step 11

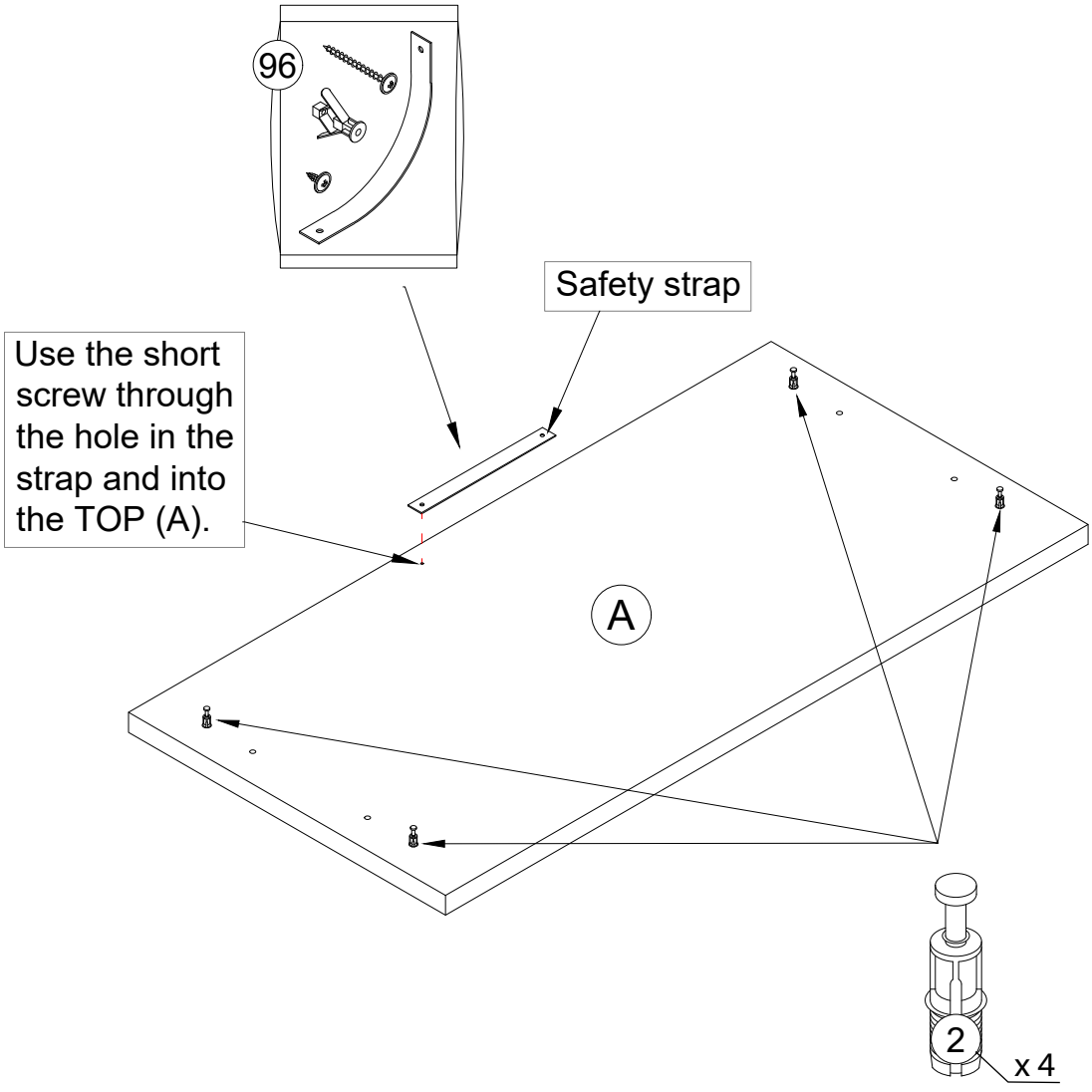
96
Safety strap
Use the short screw through the hole in the strap and into the TOP (A).
A
2
x 4

Step 12

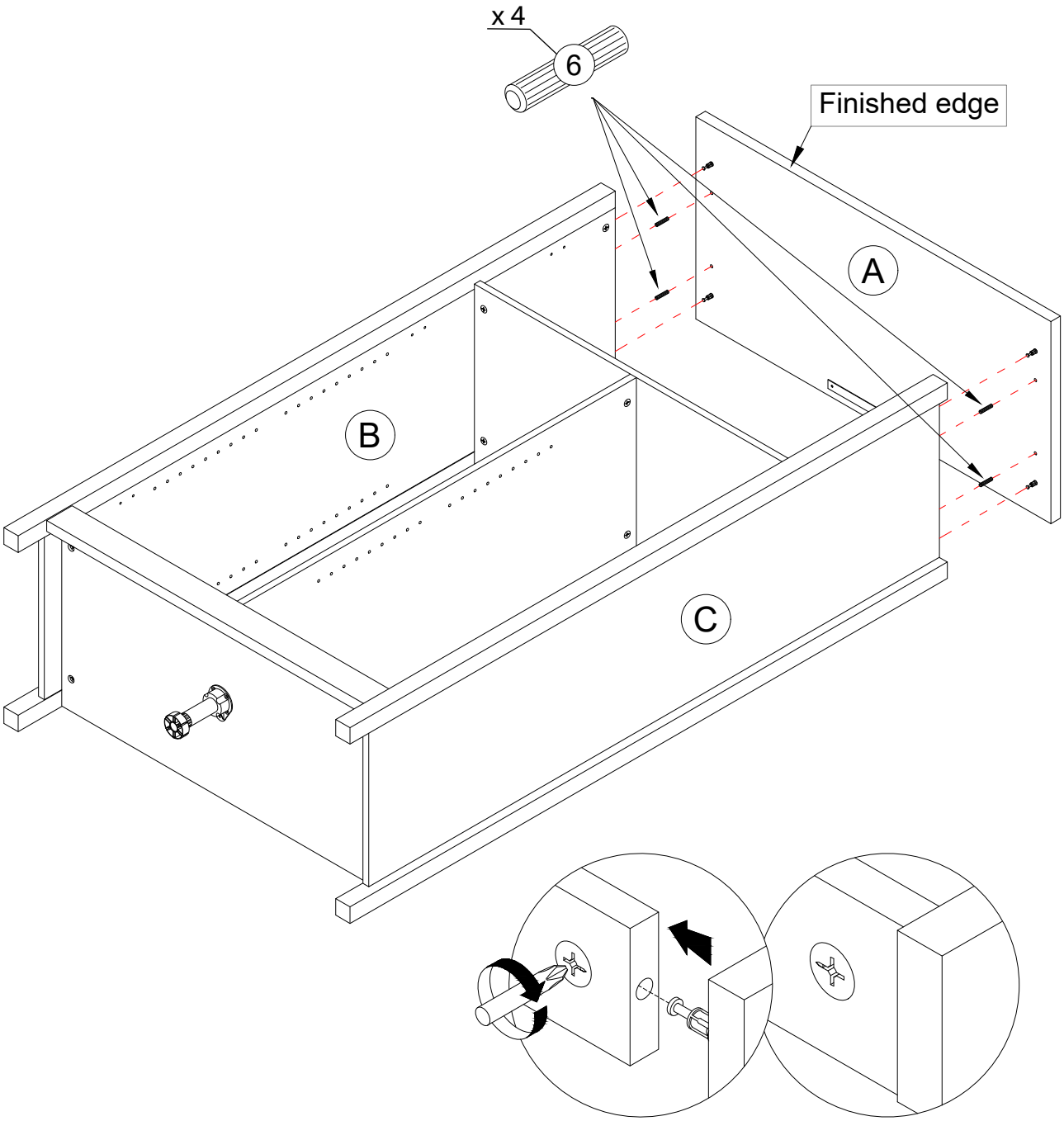

Step 13

Turn the unit onto its front edge

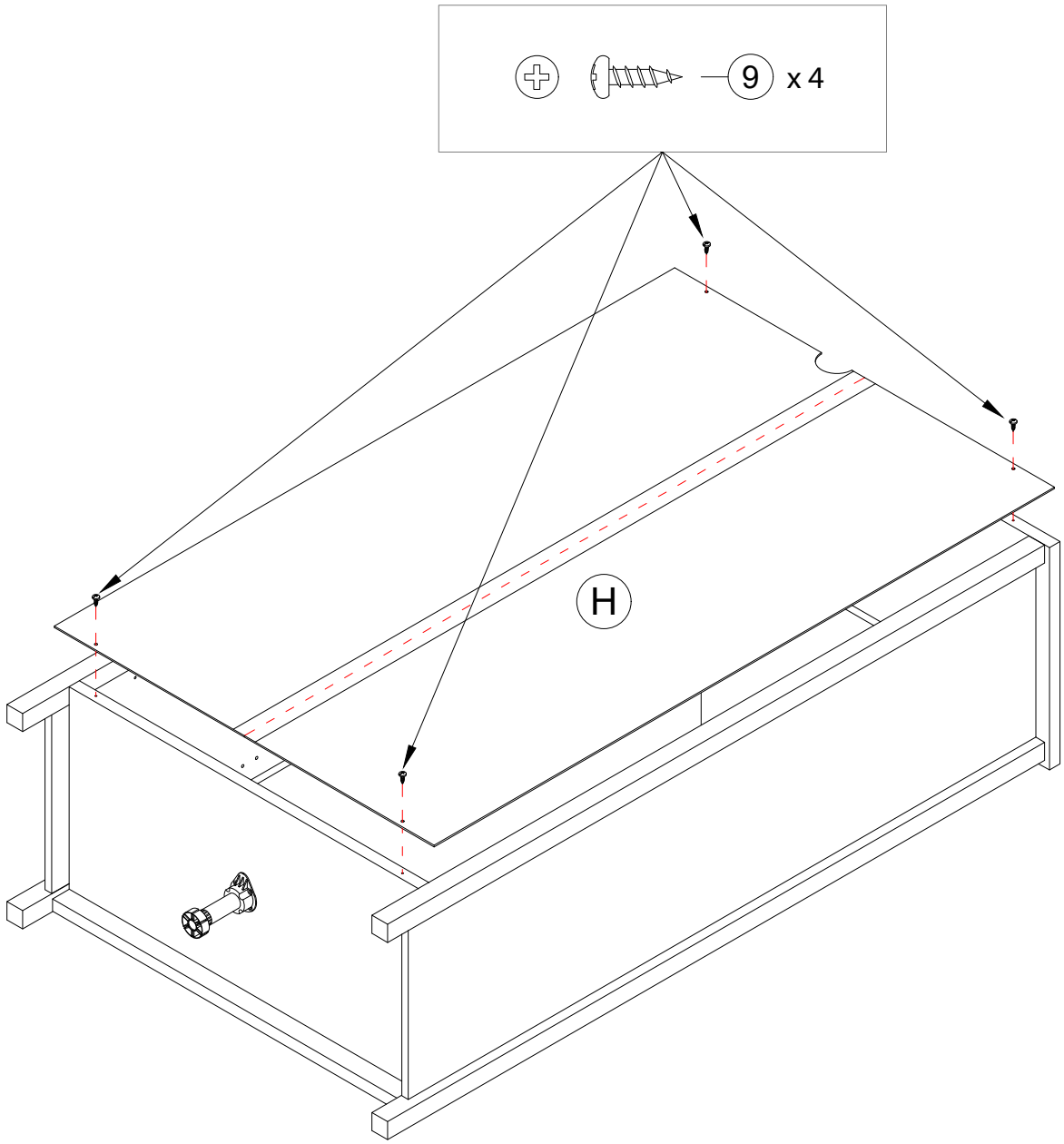

Step 14

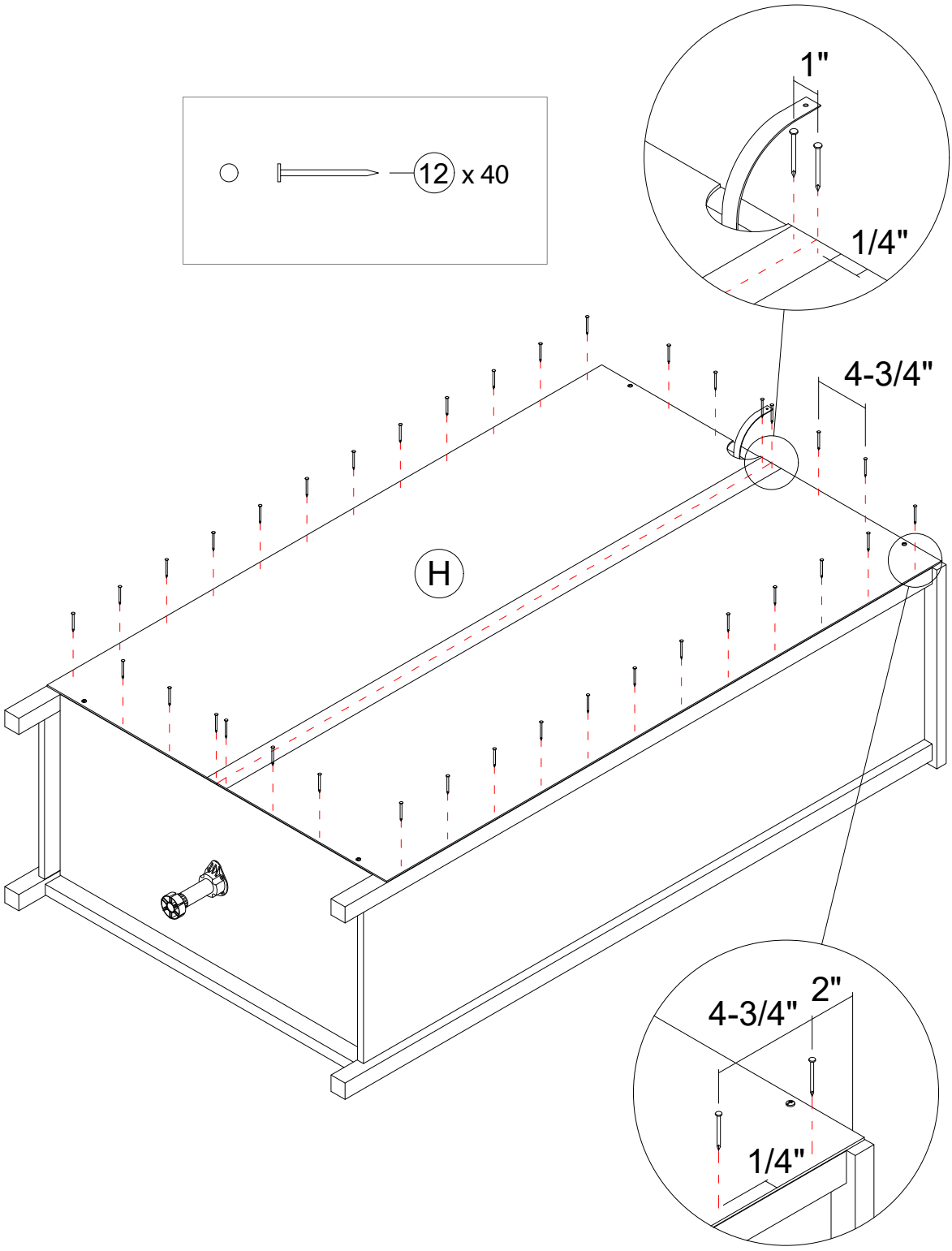

Step 15

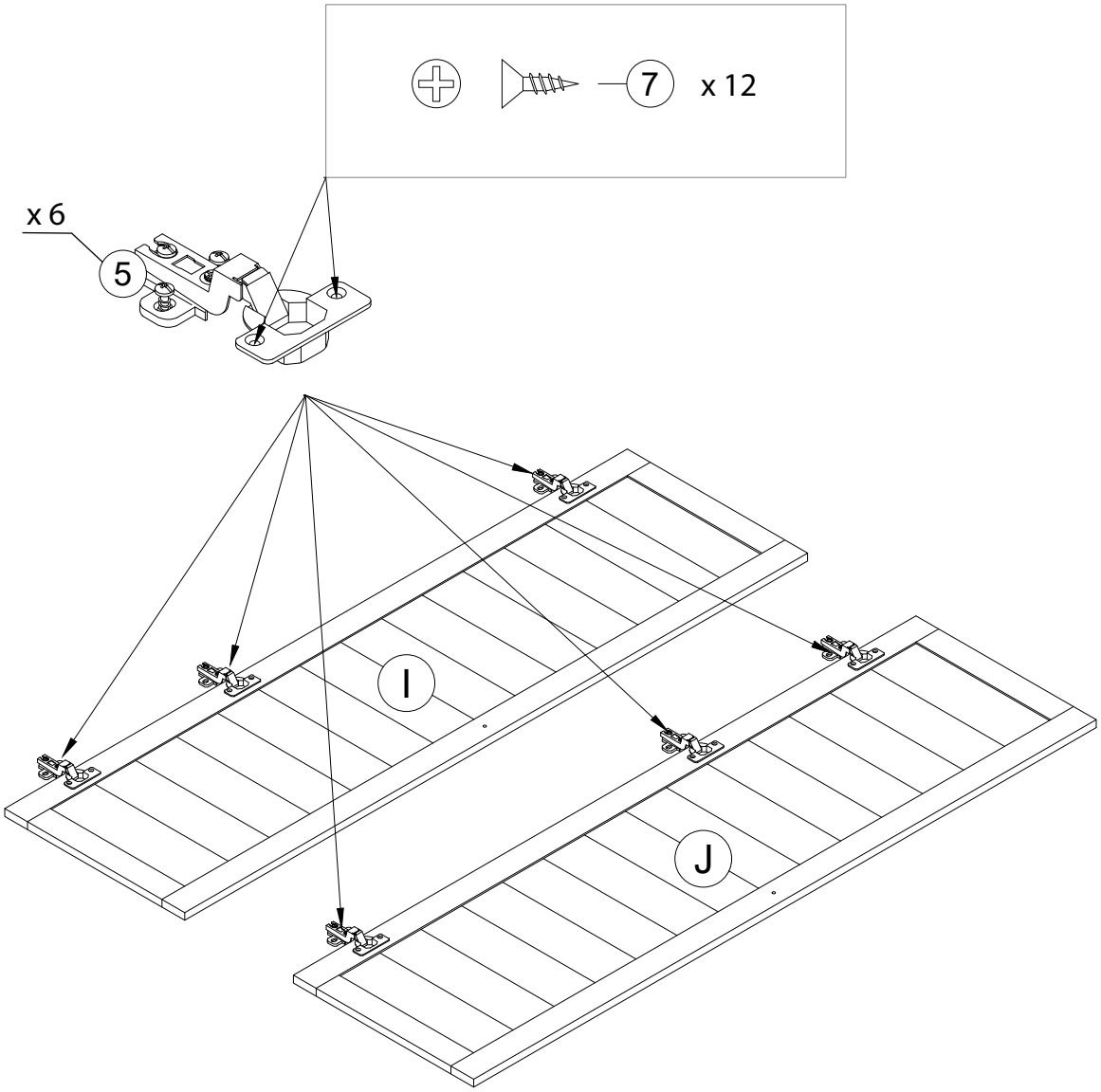

Step 16

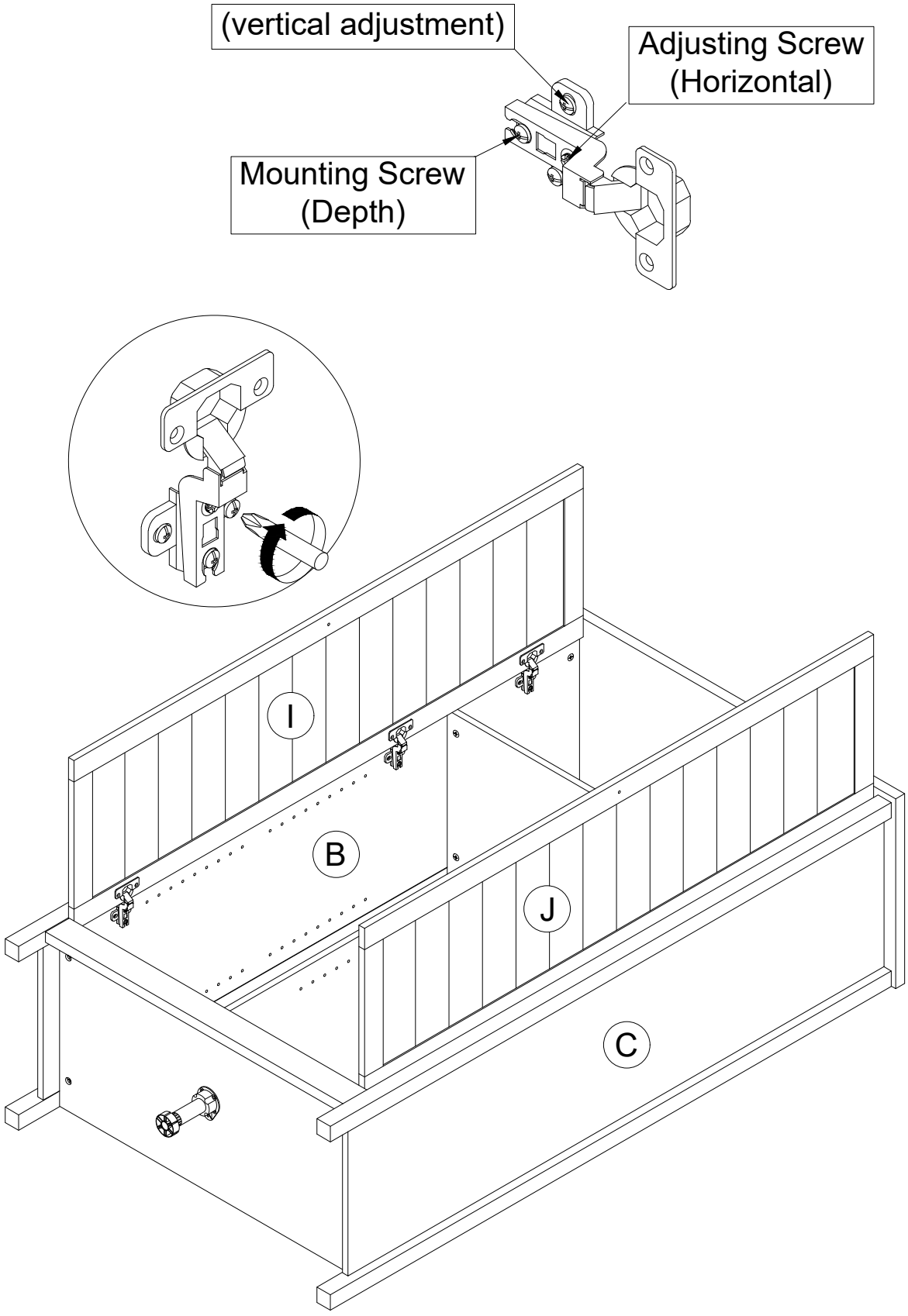
(vertical adjustment)
Adjusting Screw
(Horizontal)
Mounting Screw
(Depth)
I
B
J
C

Step 17

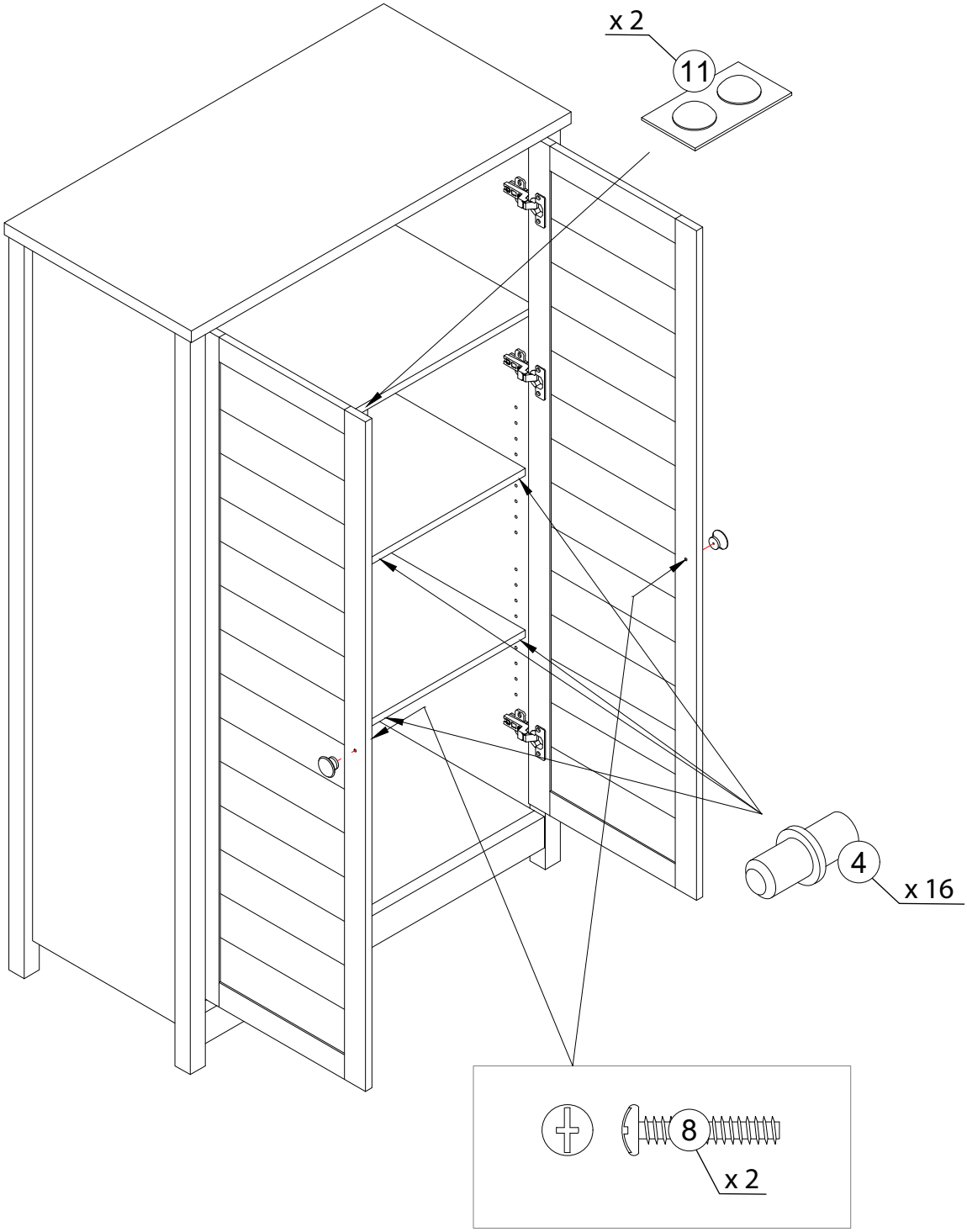

Step 18

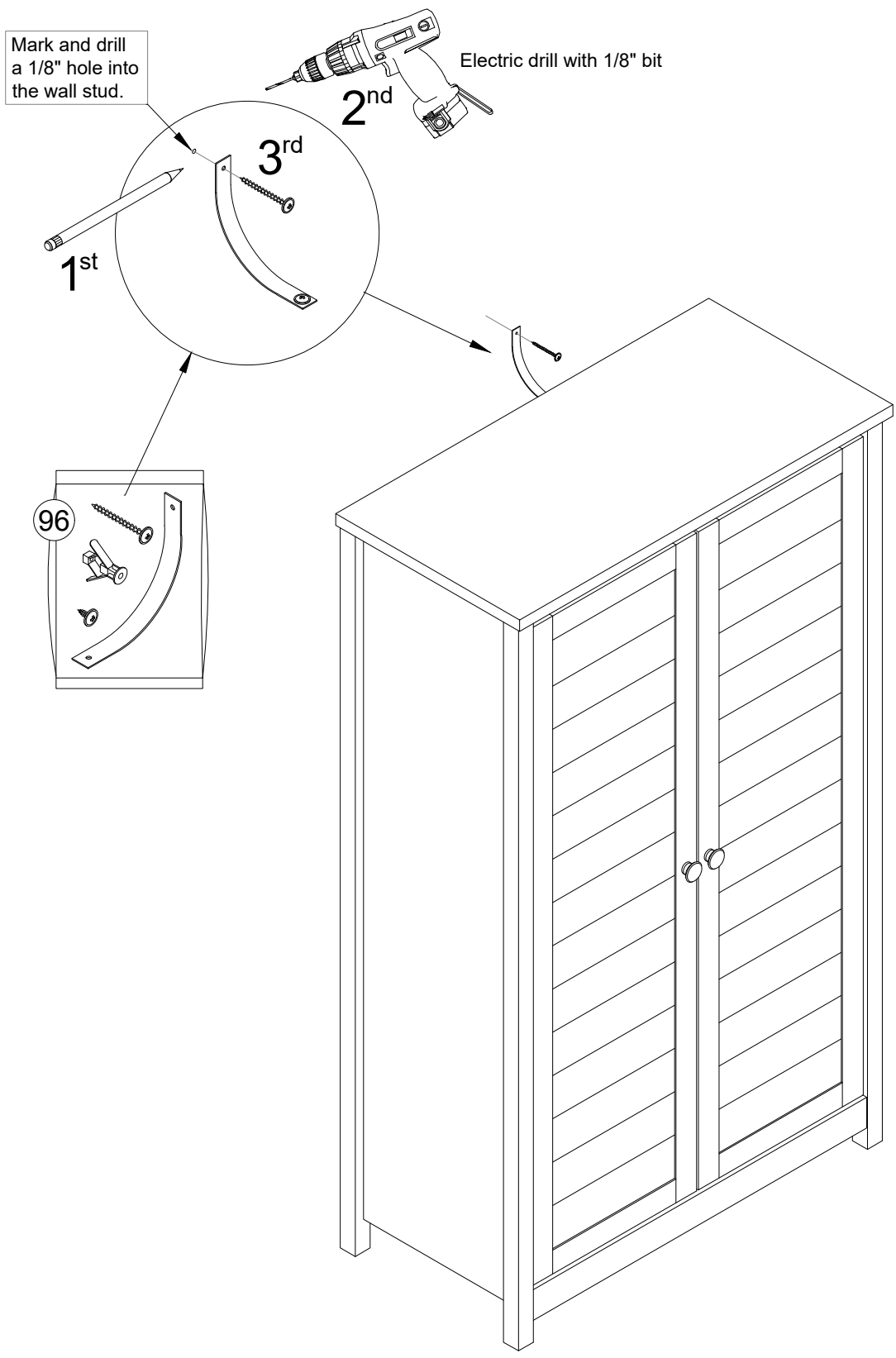
Mark and drill a 1/8" hole into the wall stud.
Electric drill with 1/8" bit
2nd
3rd
1st
96

Step 19

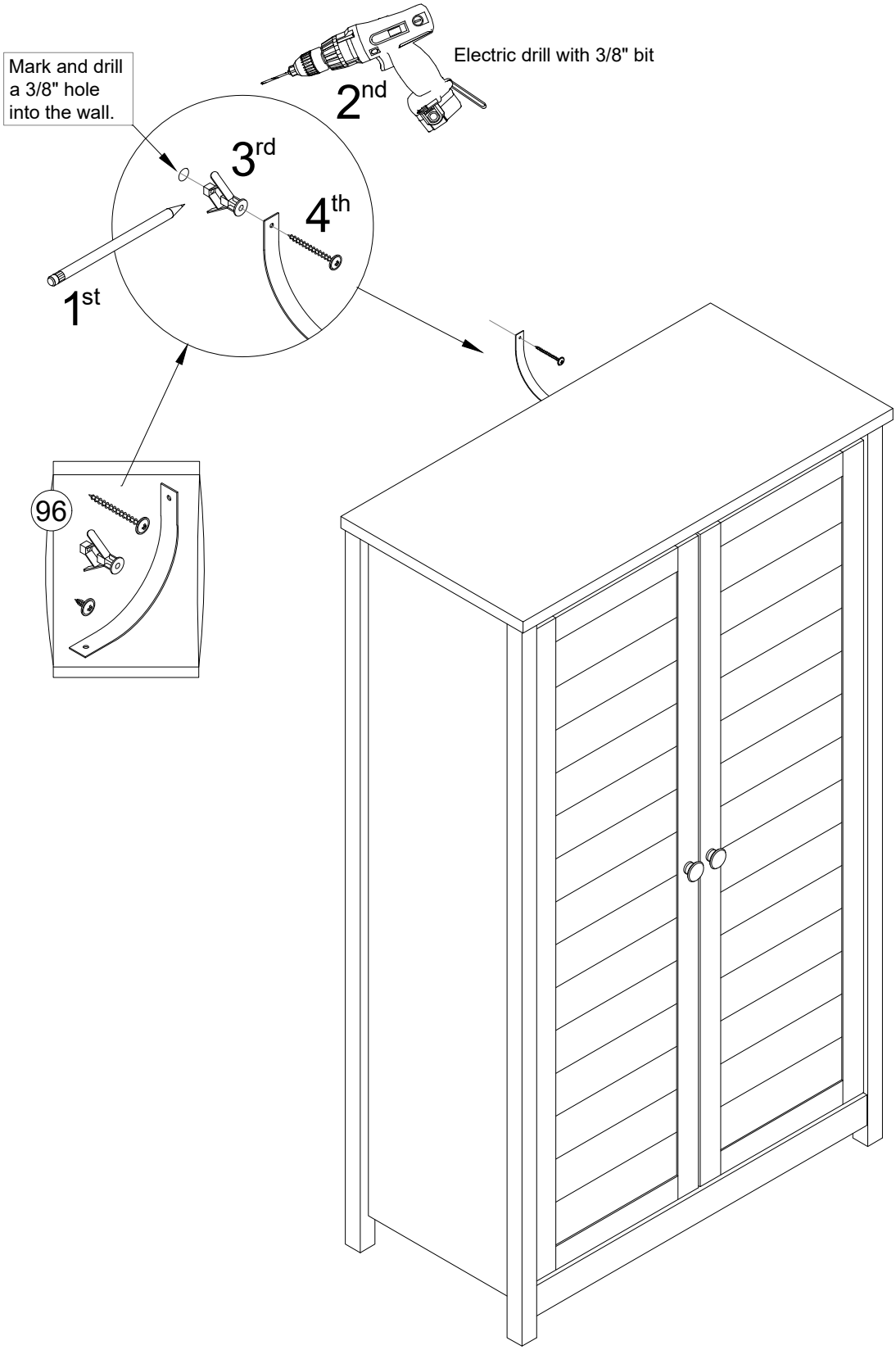
Mark and drill a 3/8" hole into the wall.
Electric drill with 3/8" bit
2nd
3rd
4th
1st
96

Step 20

