

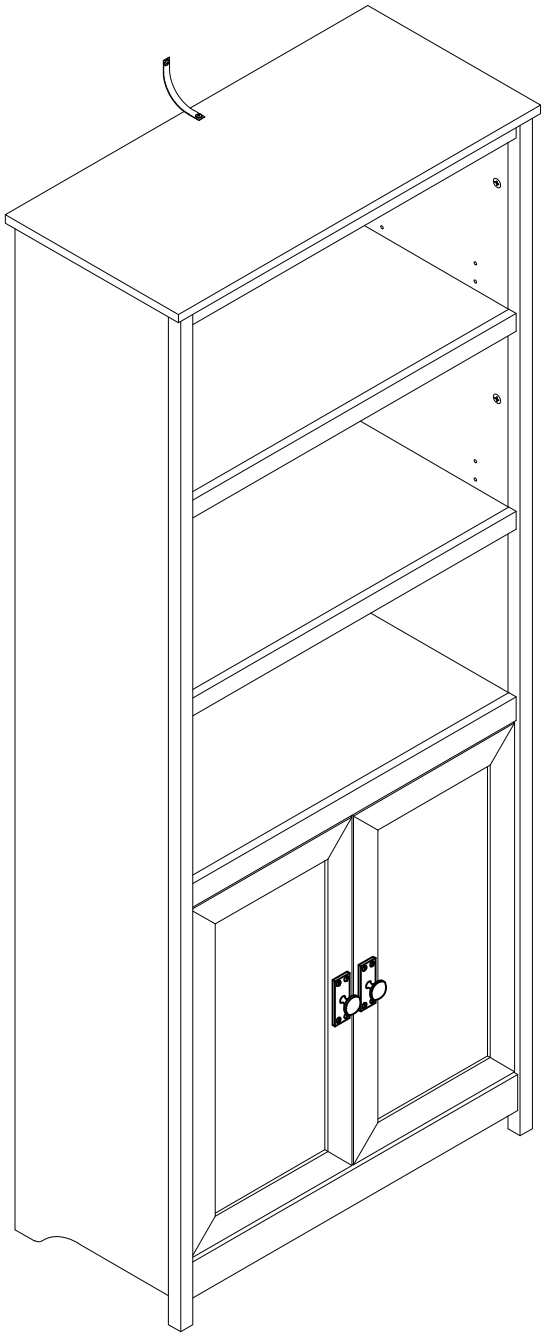

MODEL: SC24007

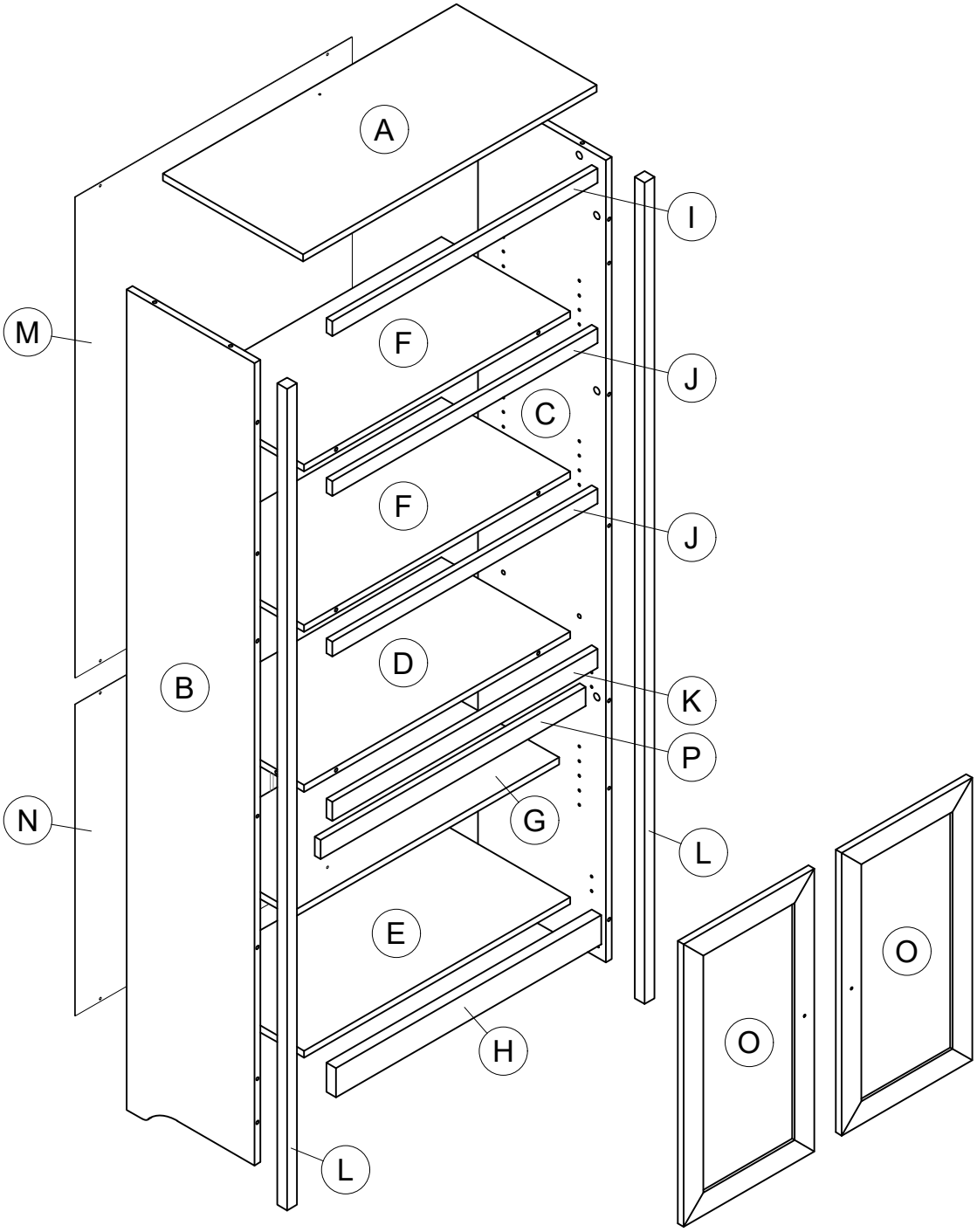
A
I
M
F
J
C
F
J
D
K
P
N
G
L
E
O
O
H
L

HARDWARE LIST

1 x 26

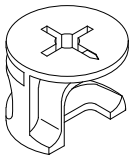

2 x 26

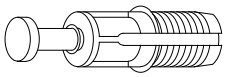

3 x 2

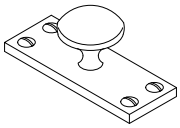

4 x 12

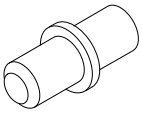

5 x 4

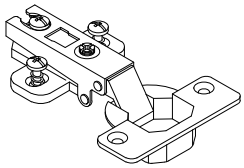

6 x 6

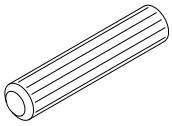

7 x 32

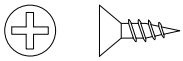

8 x 2



9 x 6



10 x 8

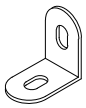

11 x 12

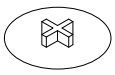

12 x 26

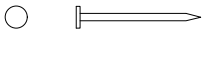

13 x 2



96 x 1

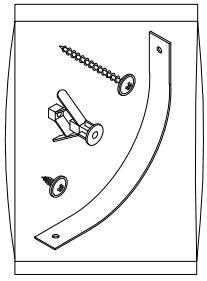

Step 1

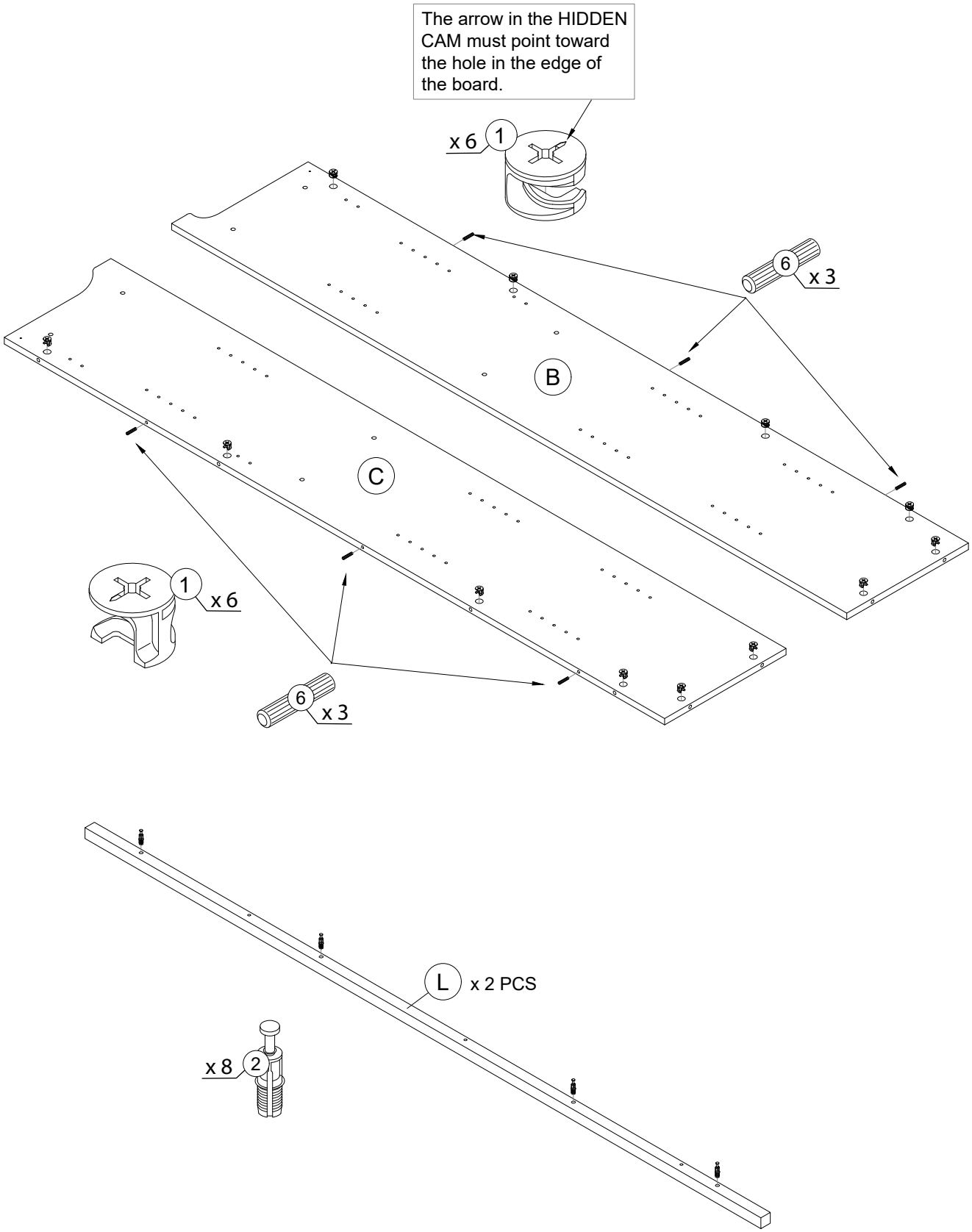
The arrow in the HIDDEN CAM must point toward the hole in the edge of the board.
x 6
1
6
x 3
B
C
1
x 6
6
x 3
L
x 2 PCS
x 8
2

Step 2

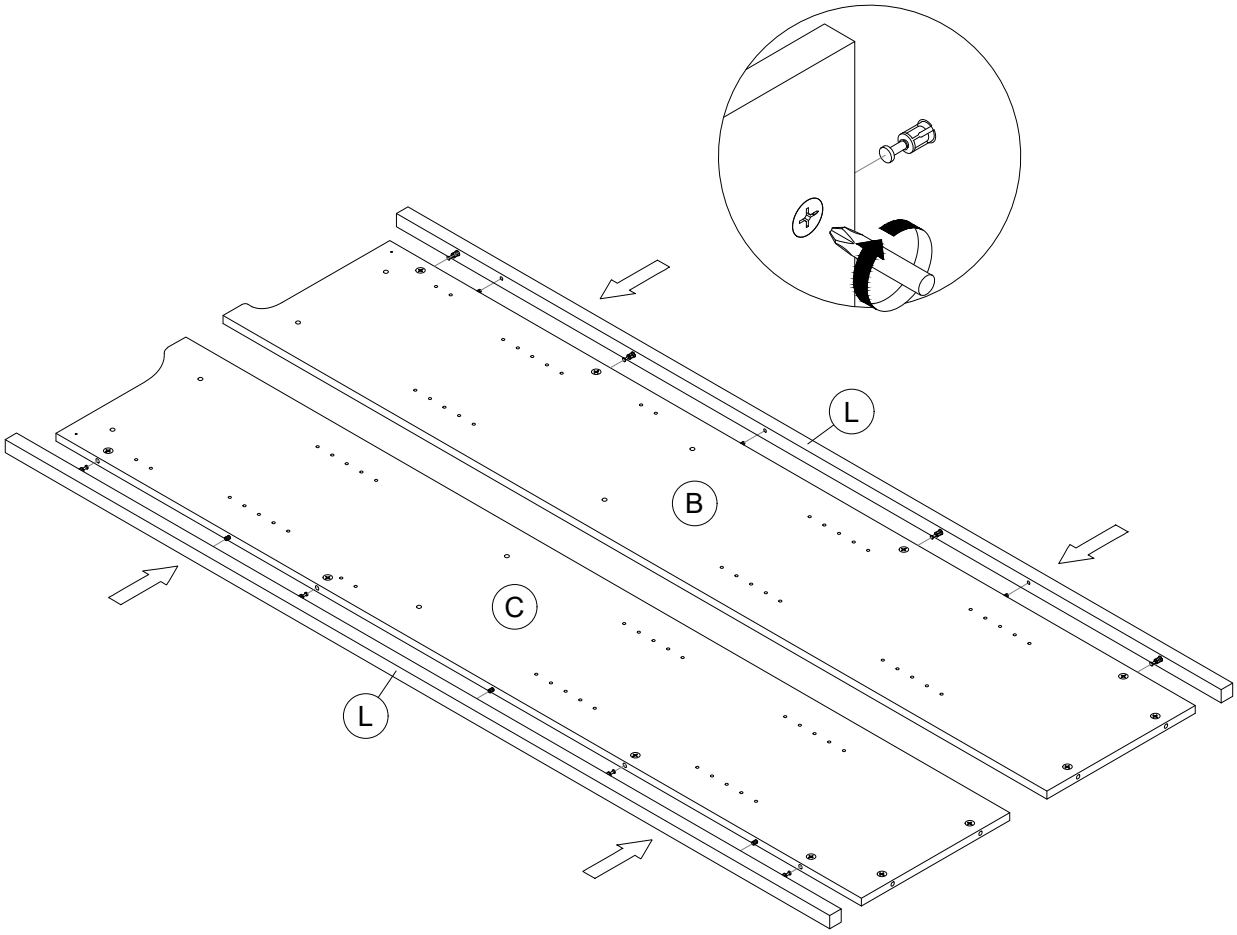

Step 3

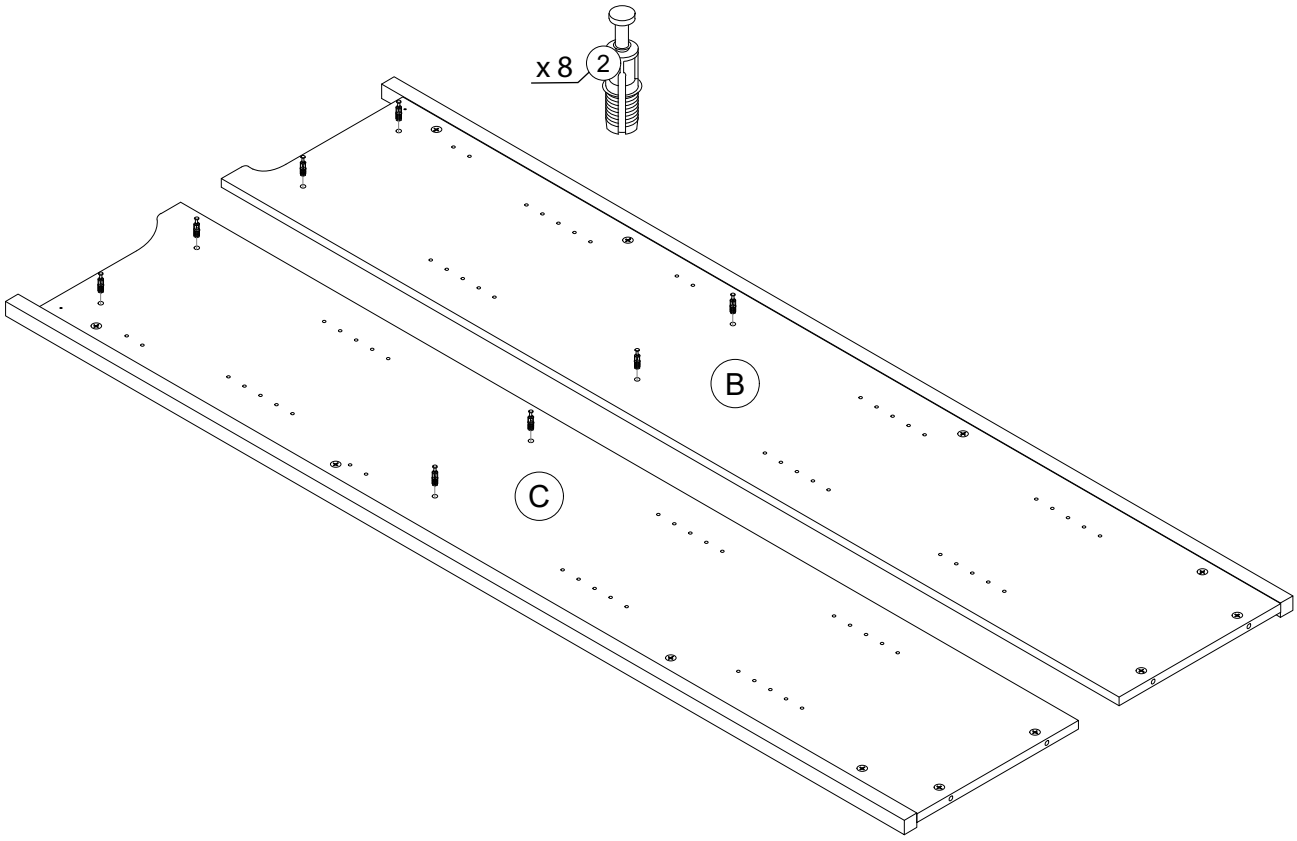

Step 4

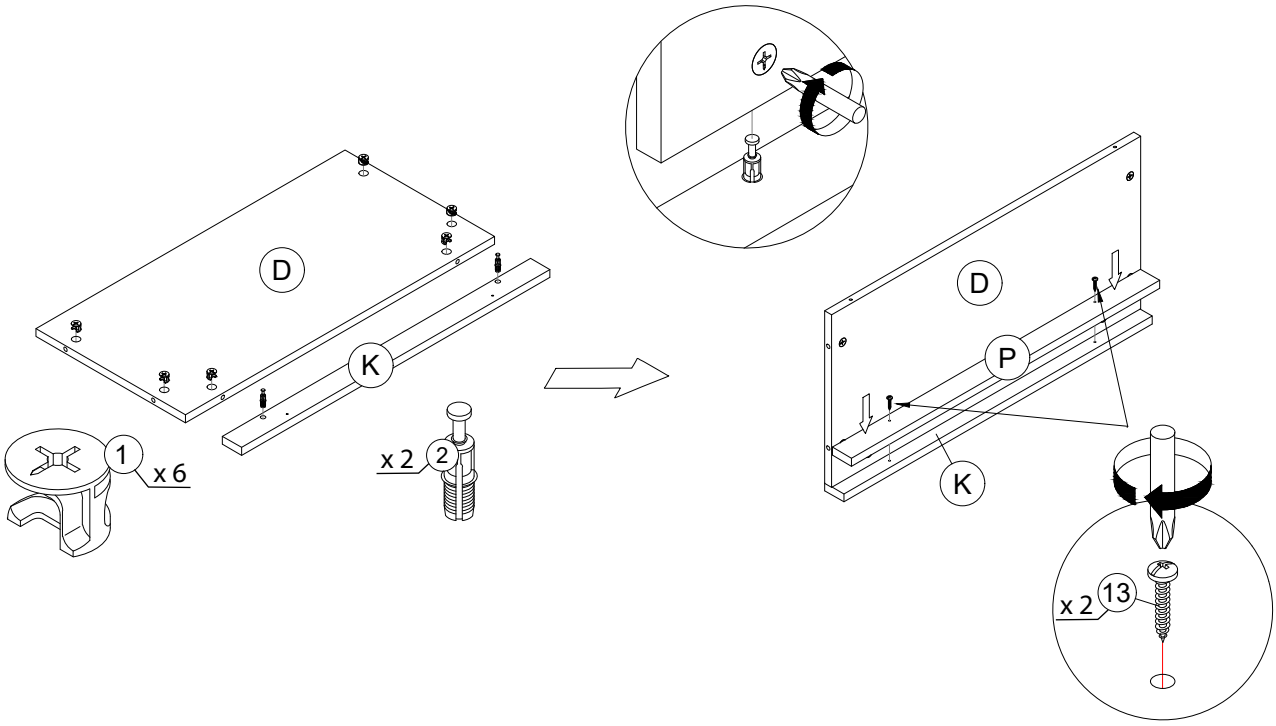

Step 5

The arrow in the HIDDEN CAM must point toward the hole in the edge of the board.

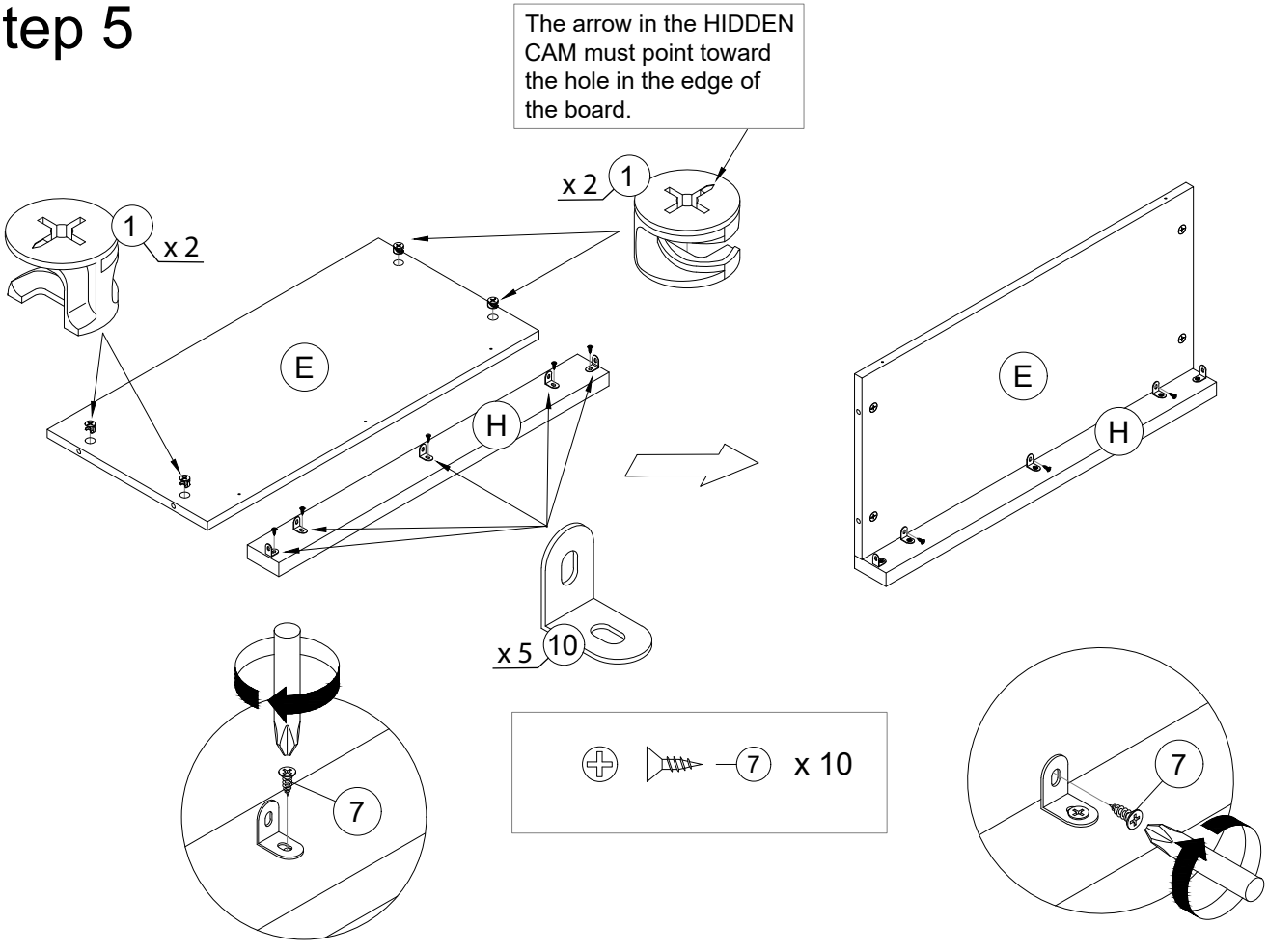

Step 6

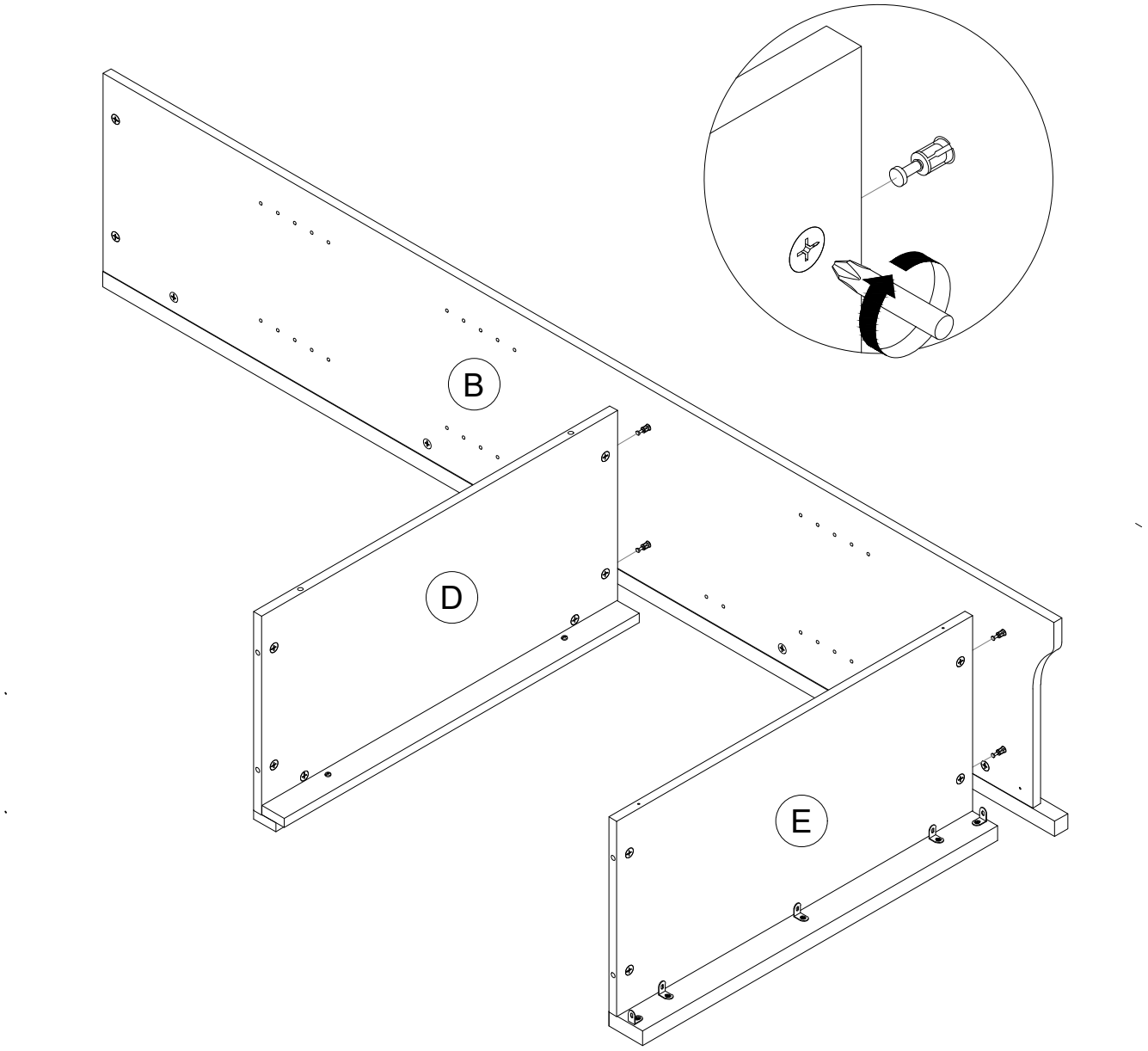

Step 7

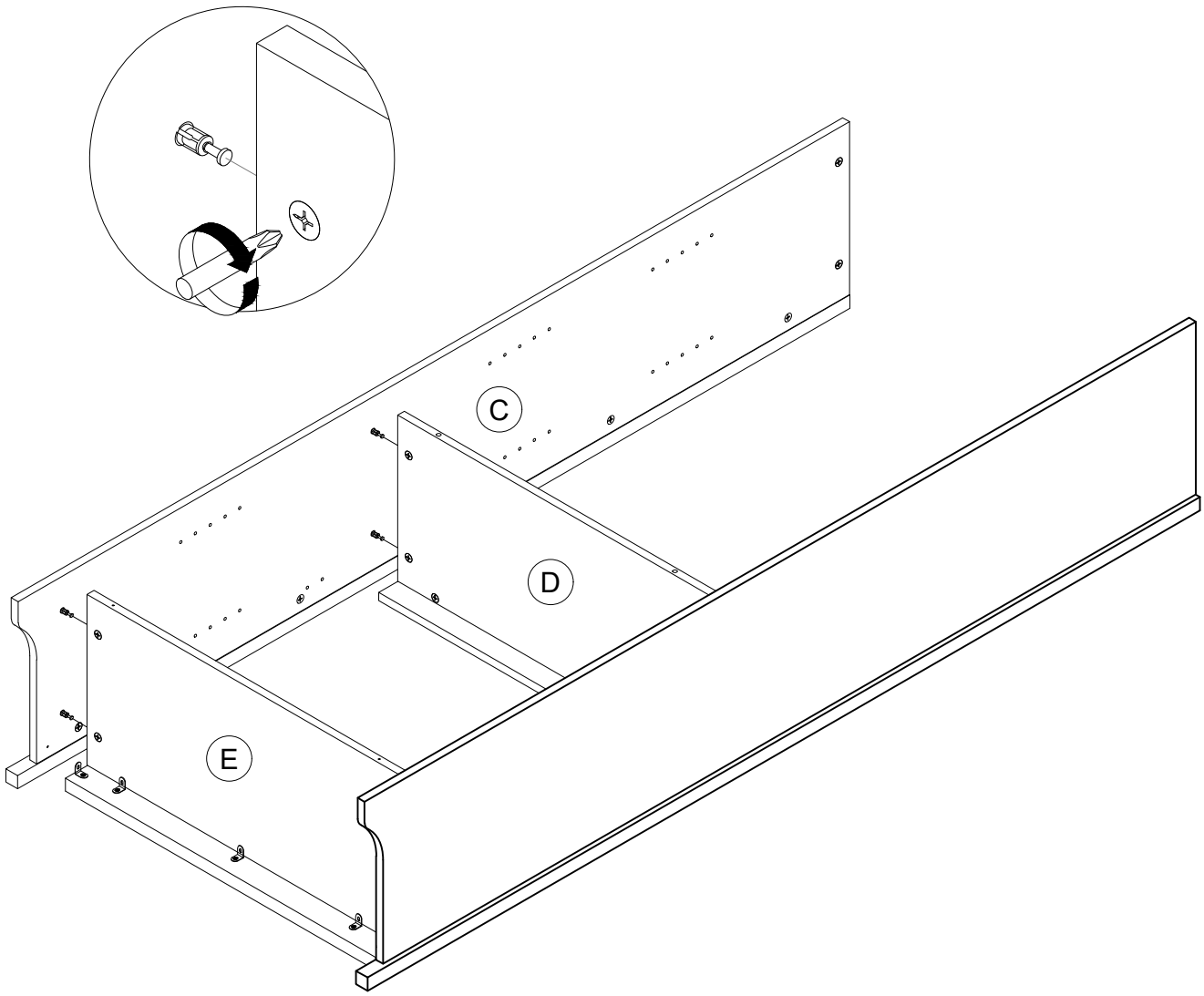

Step 8

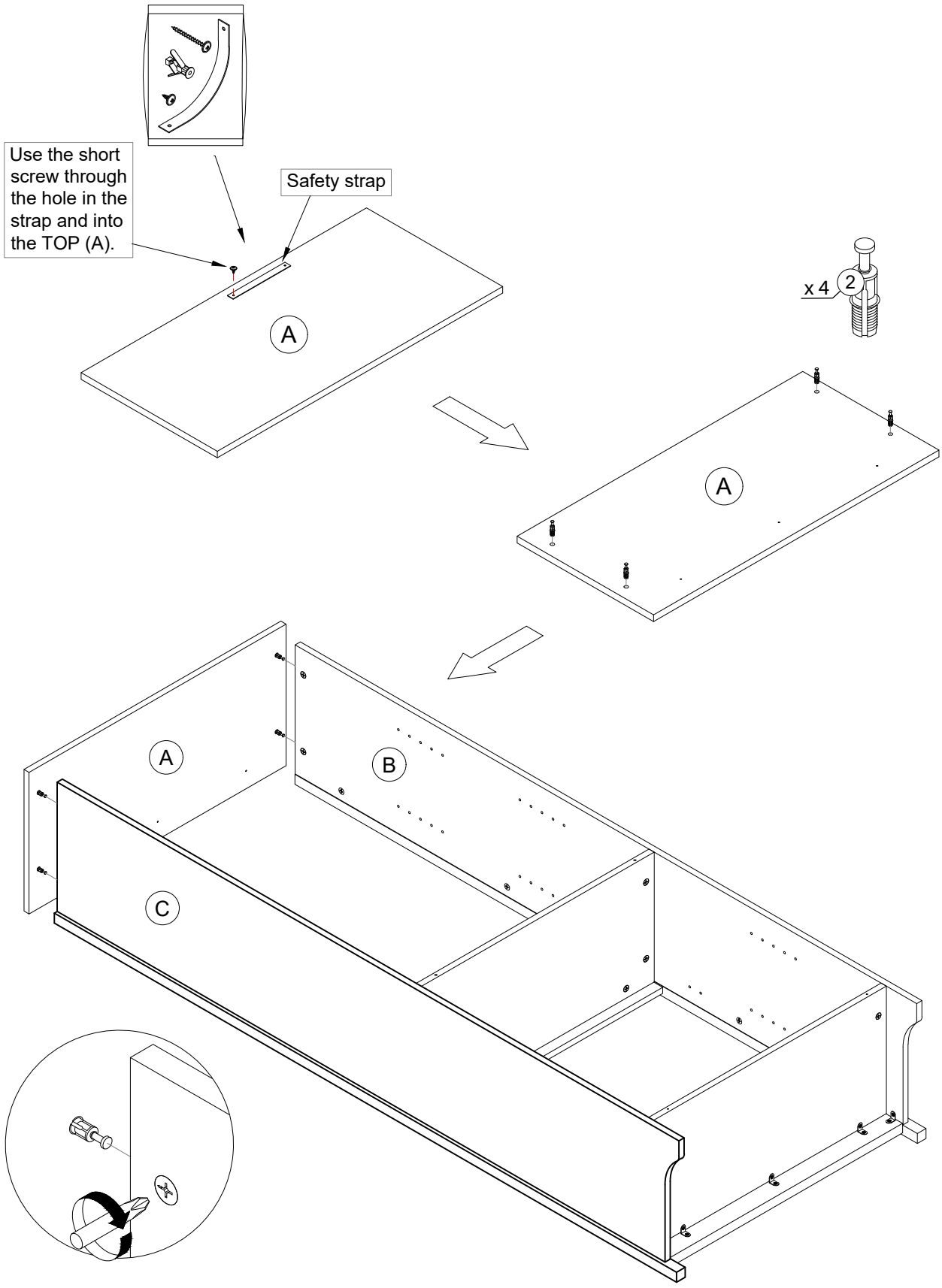
Use the short screw through the hole in the strap and into the TOP (A).
Safety strap
A
x 4
2
A
A
B
C

Step 9

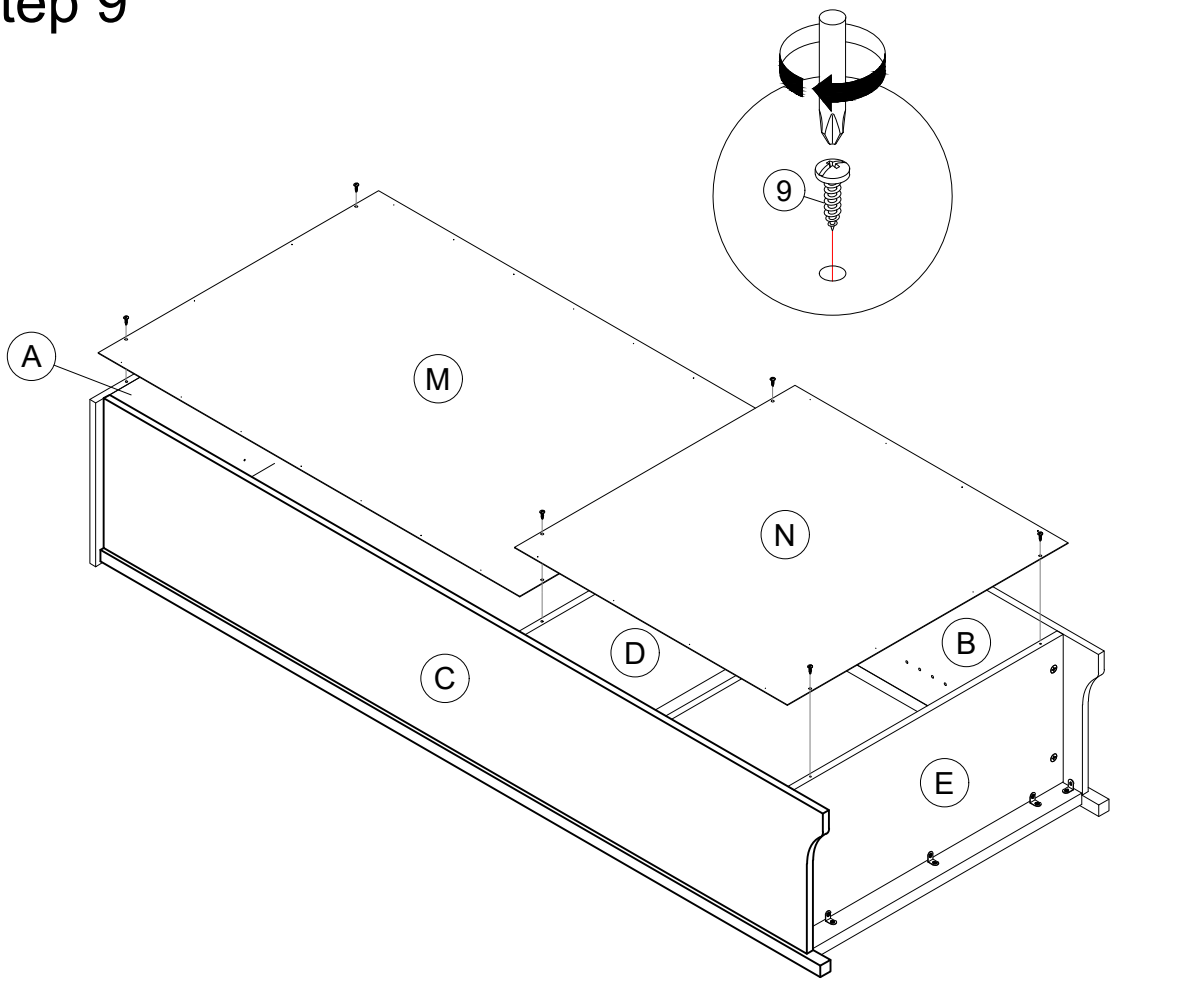

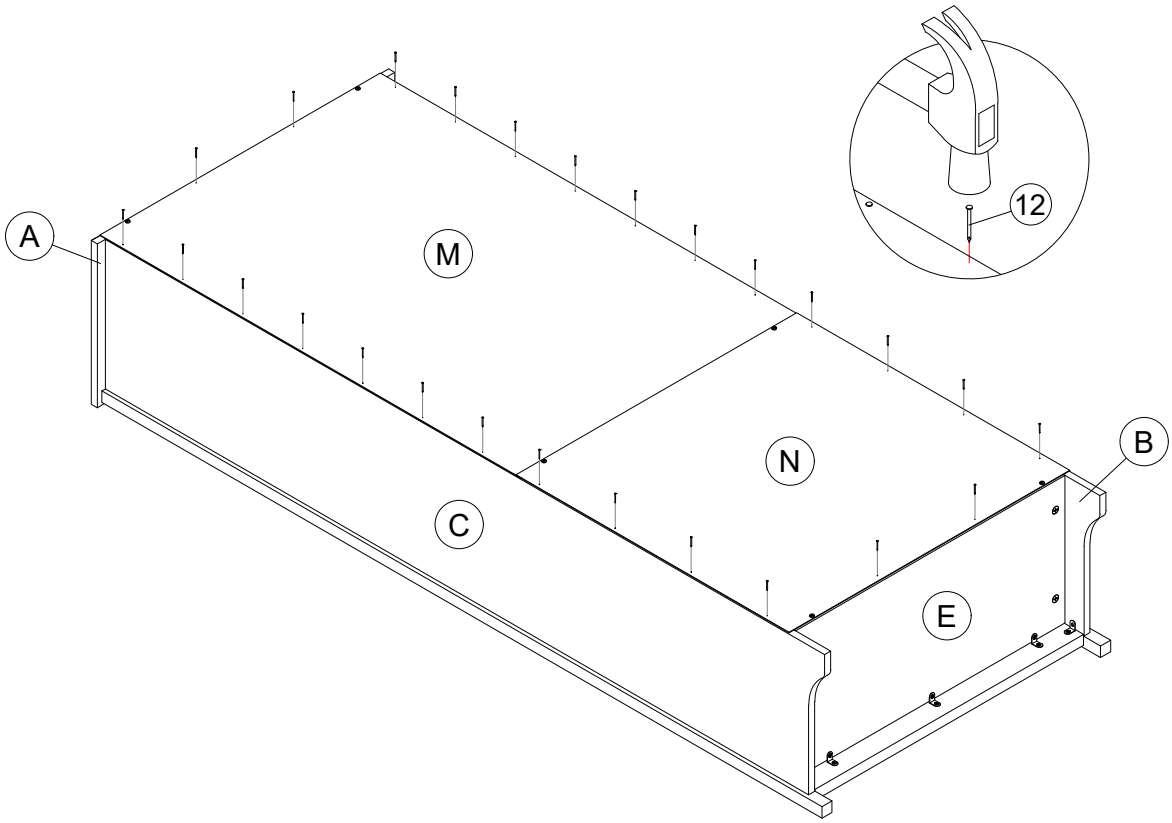

Step 10

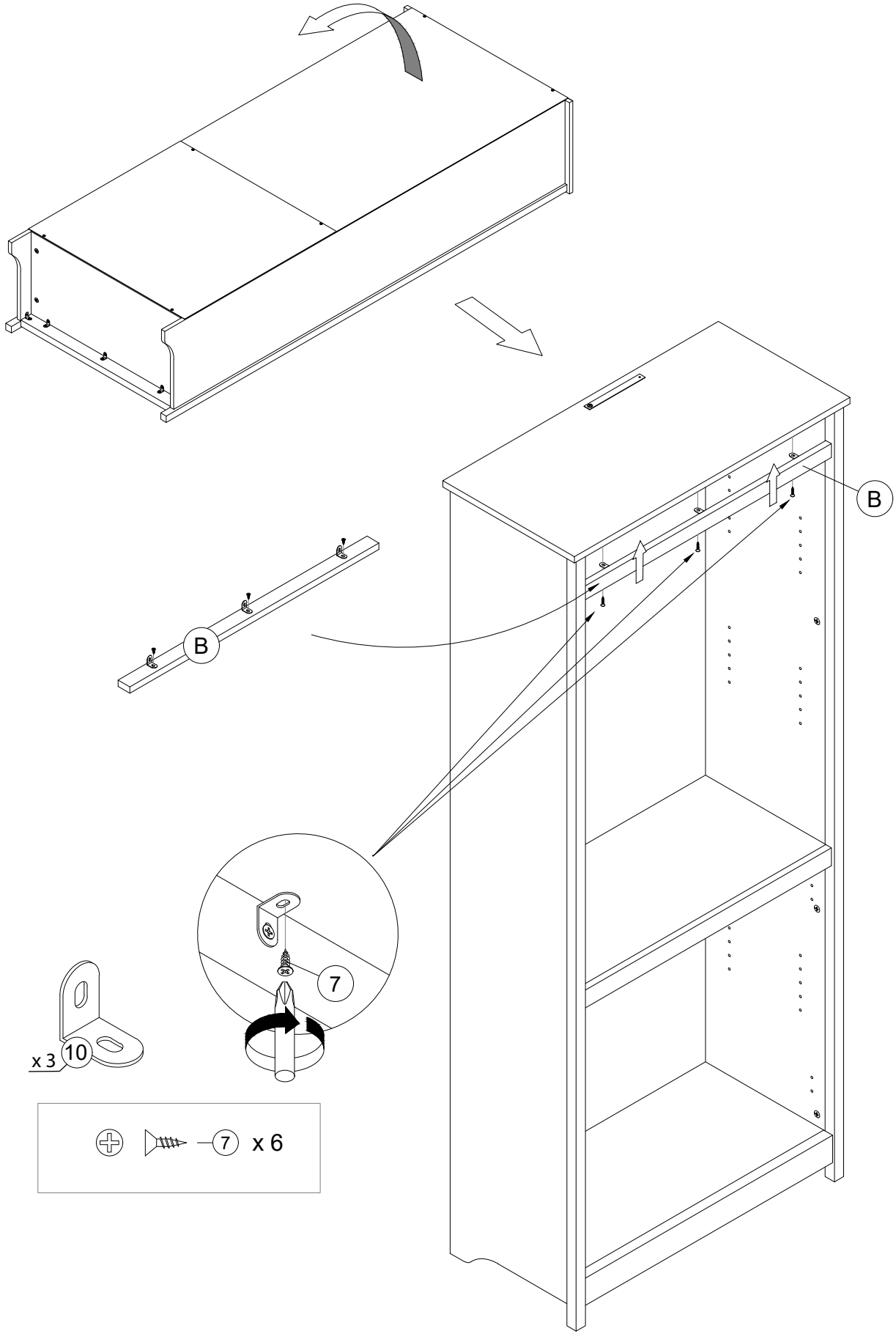

Step 11

OPTION 1

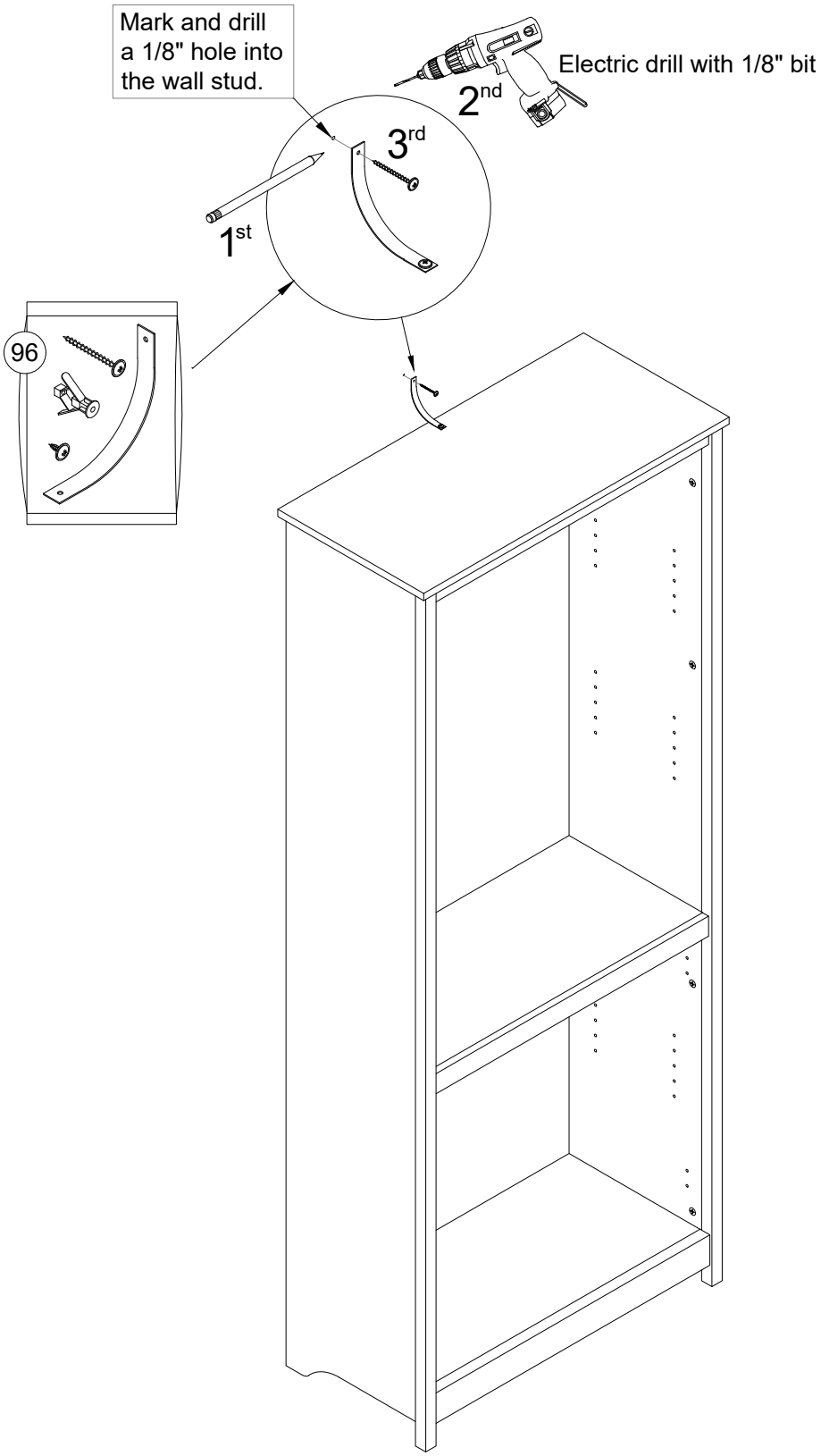

Step 12

OPTION 2

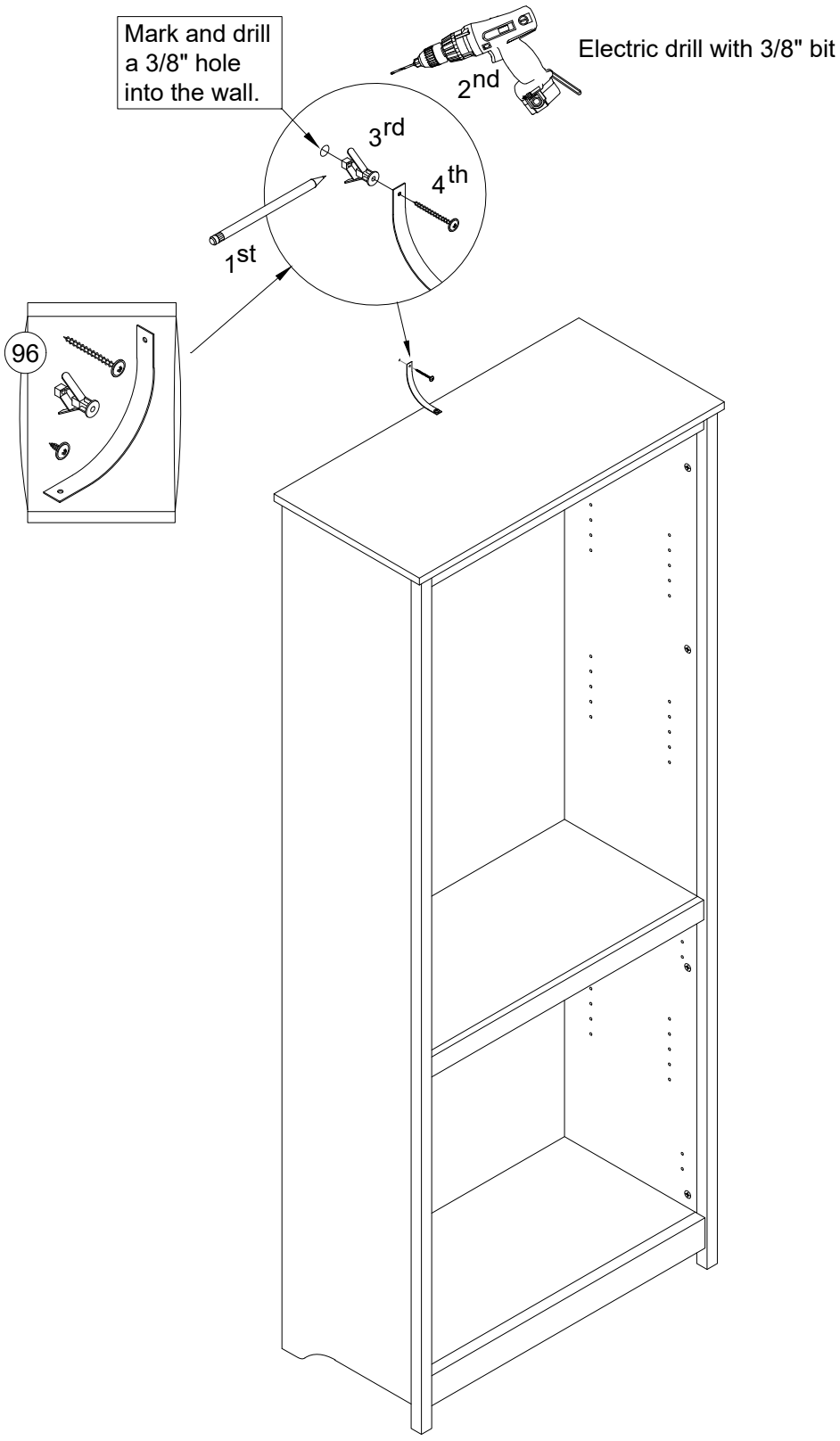

Step 13

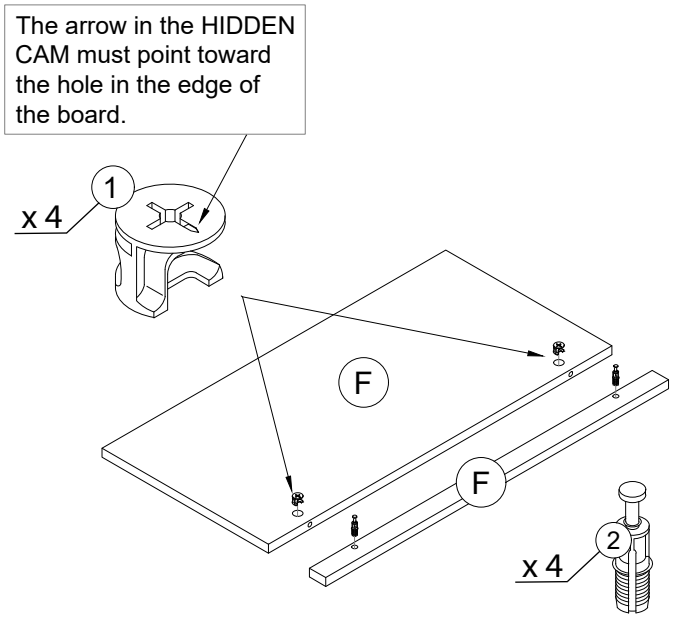
The arrow in the HIDDEN CAM must point toward the hole in the edge of the board.
1
x 4
F
F
2
x 4

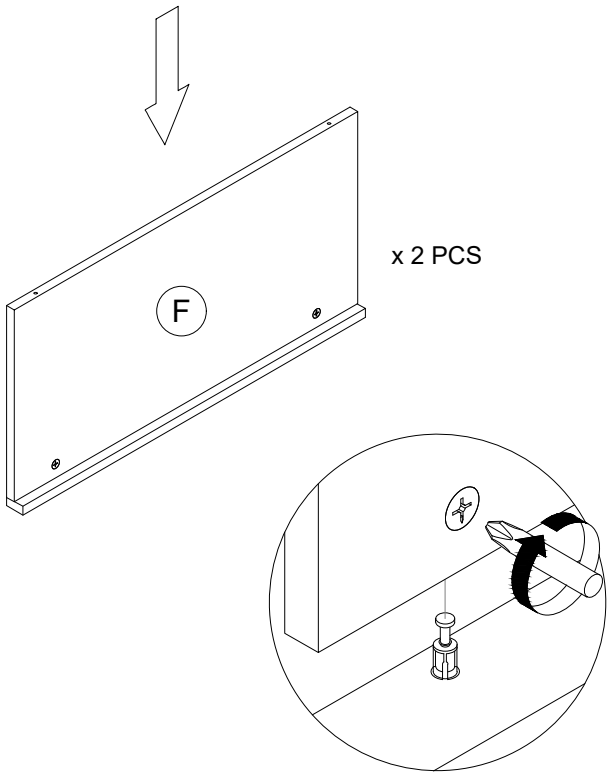
F
x 2 PCS

Step 14

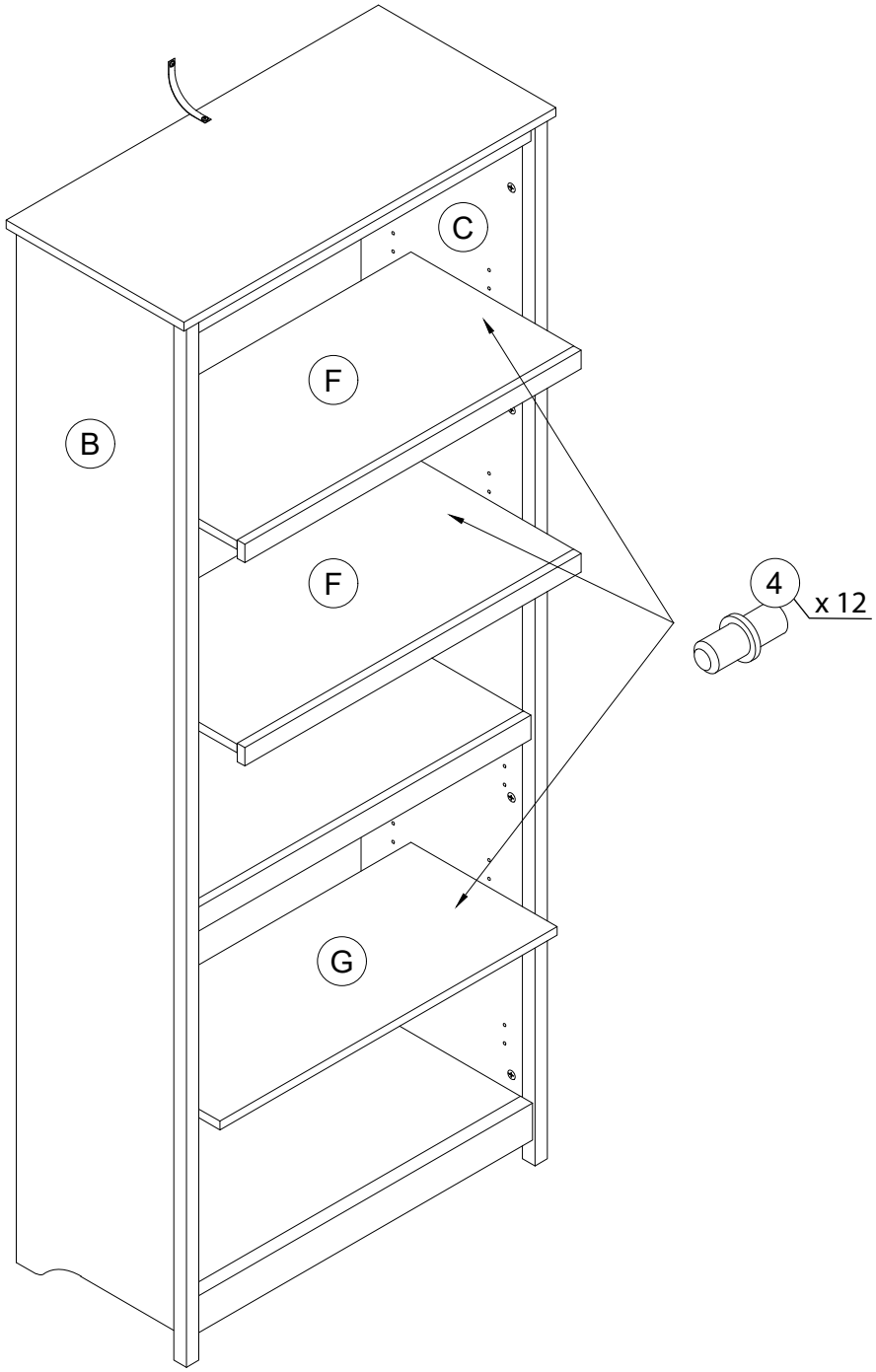

Step 15

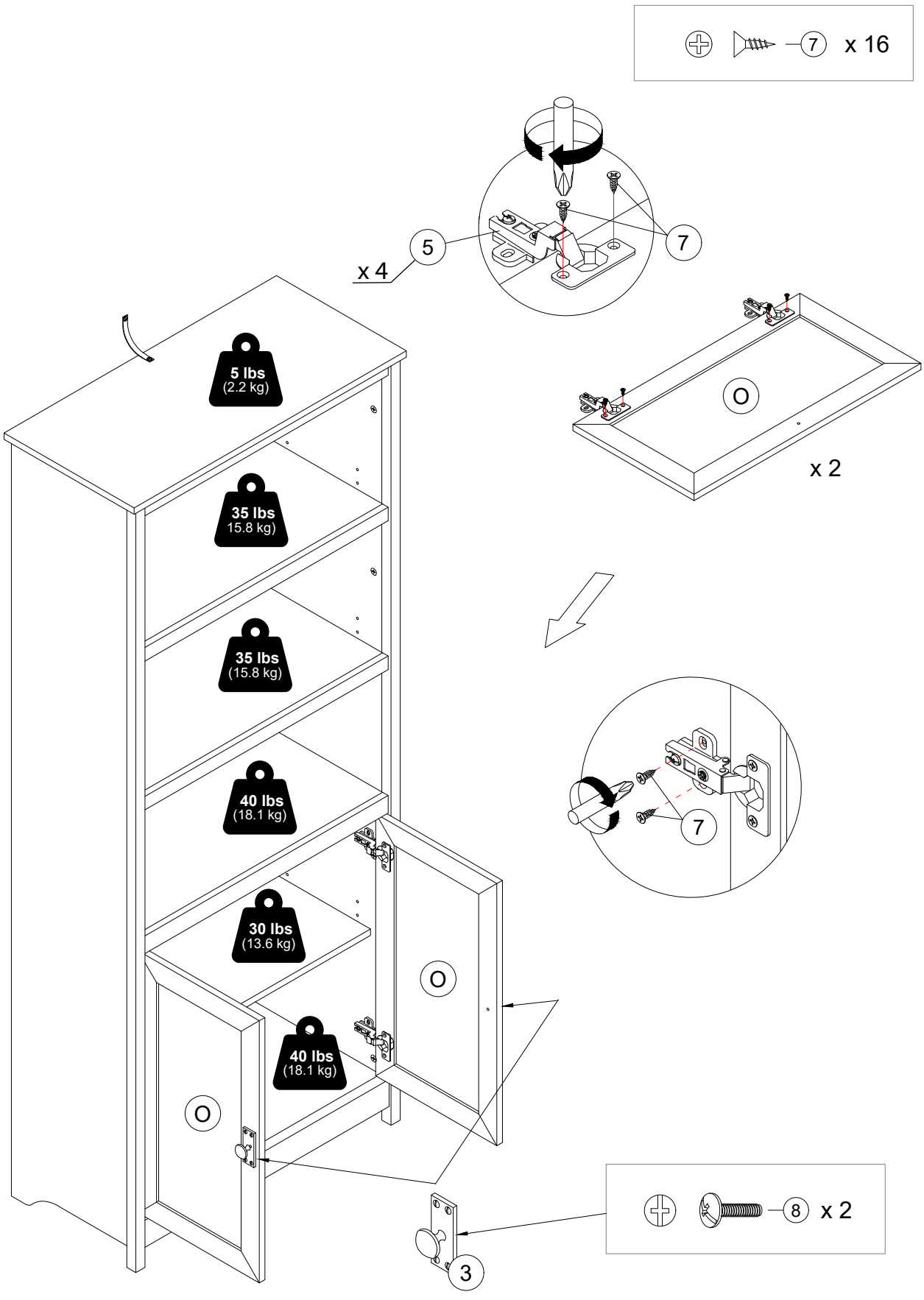
7 x 16
x 4
5
7
O
x 2
5 lbs
(2.2 kg)
35 lbs
15.8 kg)
35 lbs
(15.8 kg)
40 lbs
(18.1 kg)
30 lbs
(13.6 kg)
40 lbs
(18.1 kg)
O
O
7
8 x 2
3