SF103N1

Furinno Euro Classic Fabric Accent Chair

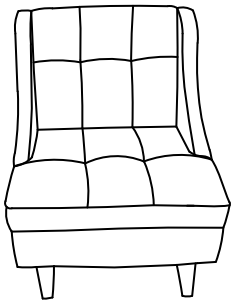

www.furinno.com

NEED HELP? For replacement requests or product inquiries, please contact our Customer Service Team by emailing us at **support@furinno.com**. Thank you for selecting Furinno!

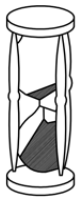
30 min


x 1

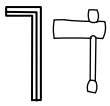
Tools Included

USEFUL HINTS BEFORE YOU START:

1. Read each step carefully before starting.
2. It is important that each step is performed in correct order to avoid difficulties.
3. Identify, sort and count the parts before assembly.
4. Assemble your furniture on packaging cardboard to prevent scratch or damage.
5. Clean the product with mild cleanser using soft damped cloth. Do not use harsh or abrasive cleanser.
6. Using uncompatible hardware might cause damage to product.

HARDWARE LIST:

A	B	C	D	E	F	G	H
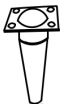							
4PCS	16PCS	1PC	1PC	4PCS	6PCS	4PCS	2PCS

ASSEMBLY INSTRUCTION

STEP 1:

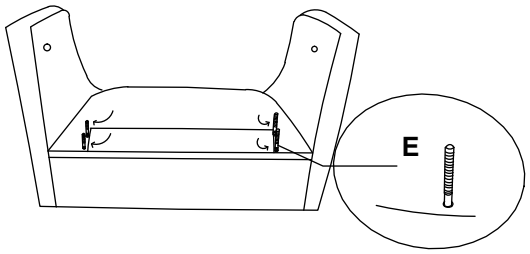

STEP 2:

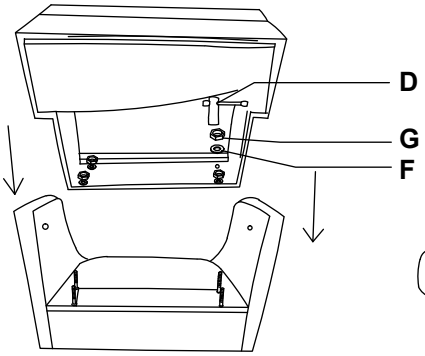

STEP 3:

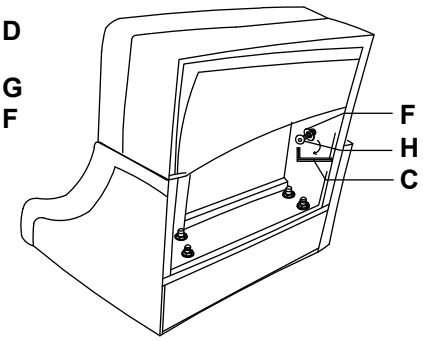

STEP 4:

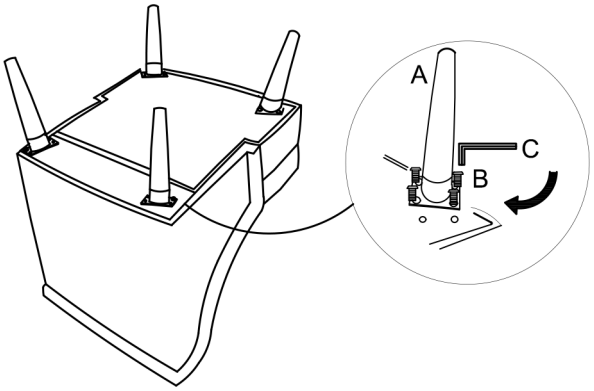

COMPLETED

